KETTLER

ASSEMBLY AND OPERATING INSTRUCTIONS

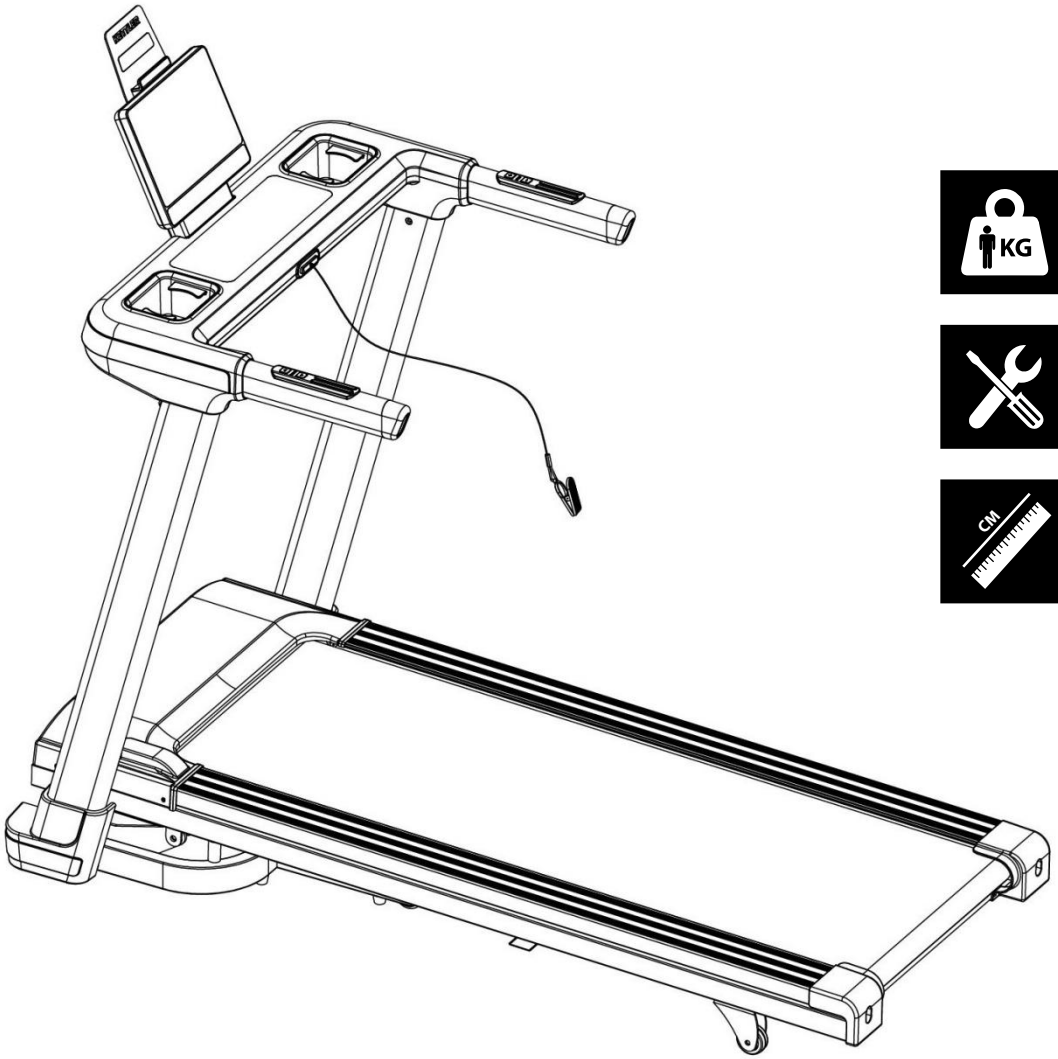

max. 110 kg

~ 60 Min.

63 kg

L 160 | W 81 | H 138

FSKTM2026100.01.01

Art. No. K-TM2026-100

ALPHA RUN 100

Content

1	GENERAL INFORMATION	8
1.1	Technical Data	8
1.2	Technical Drawings	9
1.3	Personal Safety	10
1.4	Electrical Safety	11
1.5	Set-Up Place	12
2	ASSEMBLY	13
2.1	General Instructions	13
2.2	Scope of Delivery	14
2.3	Assembly	16
3	OPERATING INSTRUCTIONS	26
3.1	Console Overview	27
3.2	Button Functions	28
3.3	Quick Keys	29
3.4	Display Modes	30
3.5	Training Programmes	30
3.5.1	Quick Start	31
3.5.2	Target Programmes	32
3.5.3	Preset Programmes	33
3.5.4	User-Defined Programmes	35
3.5.5	Heart Rate Controlled Programmes	37
3.6	Programme Table	39
3.7	USB-C Connection	40
3.8	Lubrication Reminder	40
4	WORKOUT TIPS	41
4.1	General Instructions	41
4.1.1	Training clothes	41
4.1.2	Warming up and stretching	41
4.1.3	Medication	42
4.1.4	Used muscle groups	42
4.1.5	Exercise frequency	42
4.2	Workout journal	44
4.3	Wireless Connection and Fitness Apps	45
5	STORAGE AND TRANSPORT	46
5.1	General Instructions	46

5.2 Transportation Wheels 46
5.3 Folding Mechanism 46
5.3.1 Folding Up the Treadmill 47
5.3.2 Unfolding the Treadmill 47

6 TROUBLESHOOTING, CARE AND MAINTENANCE 48

6.1 General Instructions 48
6.2 Faults and Fault Diagnosis 48
6.3 Error Codes and Troubleshooting 49
6.4 Care and Maintenance 50
6.4.1 Adjusting the Running Mat 50
6.4.2 Re-tensioning the Running Mat 51
6.4.3 Lubricating the Running Mat 51
6.5 Maintenance and Inspection Calendar 52

7 DISPOSAL 52

8 RECOMMENDED ACCESSORIES 53

9 ORDERING SPARE PARTS 54

9.1 Serial Number and Model Name 54
9.2 Parts List 55
9.3 Exploded Drawing 59

10 WARRANTY 61

11 CONTACT 63

Dear customer,

Thank you for choosing a Kettler fitness device. Kettler Sport represents tradition, durability, and quality like no other home fitness brand. Classic home trainers such as the Golf have accompanied users for decades. At the same time, Kettler stands for innovation and continuously develops thoughtful solutions, particularly in usability and training comfort.

Kettler Sport provides everything you need for successful training at home: cardio and strength equipment, as well as a wide range of fitness accessories.

Further information can be found at www.fitshop.com/kettler.

Intended Use

The equipment may only be used for its intended purpose.

The equipment is only suitable for home use. The equipment is not suitable for semi-professional (e.g. hospitals, associations, hotels, schools, etc.) and commercial or professional use (e.g. fitness studios).

Legal Notice

Fitshop GmbH
Europe's No. 1 for home fitness

International Headquarters
Flensburger Straße 55
24837 Schleswig
Germany

Management:
Christian Grau
Sebastian Campmann
Dr. Bernhard Schenkel

No. HRB 1000 SL
Local Court Flensburg
European VAT Number: DE813211547

Disclaimer

Since December 19, 2024, the trademark rights to © Kettler for fitness equipment in the EU, EFTA, and Turkey are held by Fitshop GmbH. All rights reserved. Any use of this trademark without the explicit written permission of Fitshop is prohibited.

Product and manual are subject to change. Technical data can be changed without advance notice.

FITSHOP

Europe's No.1 for Home Fitness

ABOUT THIS MANUAL

Please carefully read the entire manual before installation and first use. The manual will help you to quickly set up the system and explains how to safely use it. Make sure that all persons exercising with the equipment (especially children and persons with physical, sensory, mental or motor disabilities) are informed about this manual and its contents in advance. In case of doubt, responsible persons must supervise the use of the equipment.

Due to ongoing changes and software optimisations, the manual may have to be updated. If you notice any discrepancies during assembly or use, please refer to the manual uploaded to the webshop. The latest manual is always available there.

This equipment has been manufactured according to the latest safety knowledge. As far as possible, potential safety hazards which could cause injury have been eliminated. Make sure to carefully follow the instructions and that all parts are securely in place. If required, read through the instructions again to correct any mistakes.

Training devices must be classified according to accuracy and use. Accuracy classes are only applicable to devices that display training data.

Accuracy classes

Class A: high accuracy.
Class B: medium accuracy.
Class C: low accuracy.

The use classes explain the intended use of the training device.

Use classes

Class S (studio): professional and/or commercial use.
These training devices are intended for the use in training rooms of facilities such as sports clubs, school facilities, hotels, clubs and studios whose access and supervision is specifically regulated by the owner (person with legal responsibility).

Class H (home use): use at home.
These stationary training devices are intended for the use in private homes where access to the training device is regulated by the owner (person with legal responsibility).

Please pay close attention to the safety and maintenance instructions given here. The contract partner cannot be held liable for damage to health, accidents or damage to the equipment when it is not used in accordance with these instructions.

The following safety instructions may appear in this manual:

► **ATTENTION**
This notice indicates potentially hazardous situations which, if not avoided, may result in property damage.

⚠ **CAUTION**
This notice indicates potentially hazardous situations which, if not avoided, may result in slight or minor injuries!

⚠ **WARNING**
This notice indicates potentially hazardous situations which, if not avoided, may result in death or serious injuries!

⚠ **DANGER**
This notice indicates potentially hazardous situations which, if not avoided, will result in death or serious injuries!

ⓘ **NOTICE**
This notice indicates further useful information.

Retain these instructions in a safe place for future reference, maintenance or when ordering replacement parts.

1.1 Technical Data

Weight and dimensions	
Item weight (gross, including packaging)	71 kg
Item weight (net, without packaging)	63 kg
Packaging dimensions of cartons (L x W x H)	168 cm x 80.5 cm x 29 cm
Set-up dimensions (L x W x H)	160 cm x 81 cm x 138 cm
Folded dimensions (L x W x H)	102 cm x 81 cm x 138 cm
Running mat	
Thickness of the running mat	1.6 mm
Running Deck	15 mm
Running mat size in cm (L x W)	130 cm x 46 cm
Maximum load	
Maximum user weight	110 kg
Technical specifications	
Power supply	Plug
Power supply	220-240 V
Console data	
Display	Pulse
	Speed (SPD)
	Distance (DIST)
	Calories
	TIME
	Incline (INC)
	Pace
	FTMS
Display size	7 Inch
Display type	LCD
Engine data	
Minimum speed	0.8 km/h
Maximum speed	16 km/h
Speed interval	0.1 km/h

Incline	0 - 12 Steps
Incline interval	1 Step
Motortype	Brushless motor
Programme overview	
Heart rate programmes	3
Preset programmes	24
Custom programmes	3
Target programmes	3
Quick Start	1
Other data	
Menu language	English
Wireless connection	Yes
Heart rate monitor	Hand pulse sensors, optional: chest strap (2.4 GHz)
Use class	H

1.2 Technical Drawings

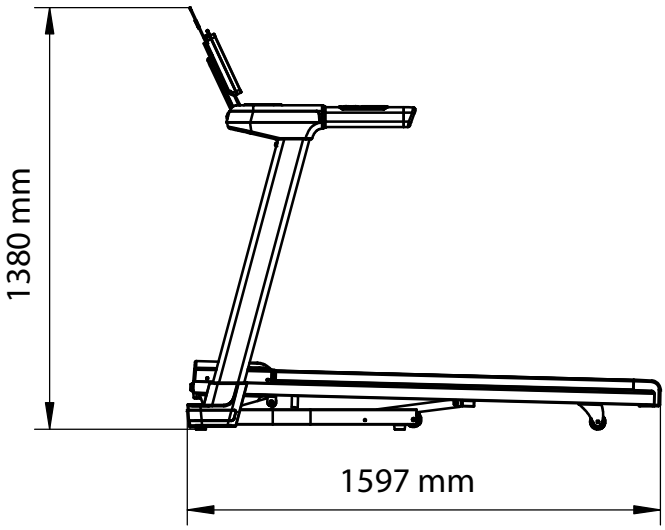

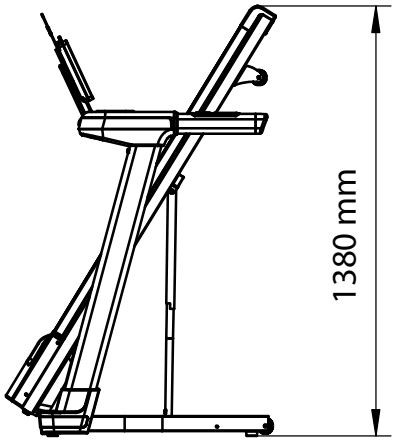

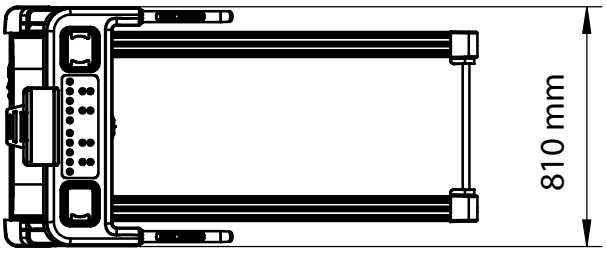

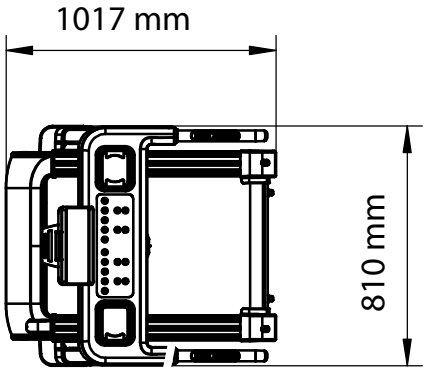

1.3 Personal Safety

⚠ **DANGER**

+ Before you start using the equipment, you should consult your physician that this type of exercise is suitable for you from a health perspective. Particularly affected are persons who: have a hereditary disposition to high blood pressure or heart disease, are over the age of 45, smoke, have high cholesterol values, are overweight and/or have not exercised regularly in the past year. If you are under medical treatment that affects your heart rate, medical advice is absolutely essential.
+ Note that excessive training can seriously endanger your health. Please also note that heart rate monitoring systems can be inaccurate. If you notice any signs of weakness, nausea, dizziness, pain, shortness of breath, or other abnormal symptoms, stop exercising immediately and seek advice from your doctor if necessary.
+ The owner must communicate all warnings and instructions to the user.

⚠ **WARNING**

+ This equipment may not be used by children under the age of 14.
+ Children should not be allowed unsupervised access to the equipment.
+ Persons with disabilities must have a medical license and must be under strict observation when using the equipment.
+ The equipment is strictly for use by one person at a time.
+ If your equipment provides a safety key, the clip of the safety key must be attached to your clothing before starting your training. In the event of a fall, the EMERGENCY STOP of the equipment can be initiated.
+ If an emergency occurs and training has to be stopped abruptly, pull out the safety key, grab both handles, jump onto the side rails and wait until the treadmill has come to a complete stop.
+ Keep your hands, feet and other body parts, hair, clothing, jewellery and other objects well clear of moving parts.
+ During use, wear suitable sports clothing rather than loose or baggy clothing. When wearing sports shoes, make sure they have suitable soles, preferably made of rubber or other non-slip materials. Shoes with heels, leather soles, studs or spikes are unsuitable. Never exercise barefoot.

⚠ **CAUTION**

+ If your equipment needs to be connected to the power supply with a mains cable, make sure that the cable is not a potential tripping hazard.
+ Make sure that nobody is within the range of motion of the equipment during training so as not to endanger you or other persons.
+ Be aware that if adjustment devices are left protruding, they may impede the user's movement.
+ The safety level of the appliance can only be maintained if it is regularly checked for damage and wear.

► **ATTENTION**

+ Do not insert any objects of any kind into the openings of the device.
+ To protect the equipment from use by unauthorised third parties, always remove the power cable (if existing) when not in use and store it in a safe place that is inaccessible to unauthorised persons (e.g. children).

1.4 Electrical Safety

⚠ **DANGER**

+ In order to reduce the risk of an electric shock, always unplug the equipment from the mains socket immediately after your workout, before assembly or dismantling, and before maintenance or cleaning. Do not pull on the cable.

⚠ **WARNING**

+ Do not leave the equipment unattended while the mains cable is plugged into the mains socket. During your absence, the mains cable must be removed from the mains socket to prevent improper use by third parties or children.
+ If the mains cable or plug is damaged or defective, contact your contract partner. Until repair, the equipment must not be used.

► **ATTENTION**

+ The equipment requires a mains connection of 220-230 V with 50 Hz mains voltage.
+ The equipment may only be connected directly to an earthed socket using the supplied mains cable. Extension cables must conform to VDE guidelines. Always completely unwind the mains cable.
+ The socket must be protected by a fuse with a minimum fuse rating of "16 A, slow blow".
+ Do not make any changes to the mains cable or the mains plug.
+ Keep the mains cable away from water, heat, oil and sharp edges. Do not route the mains cable underneath the equipment or under a carpet or rug, and do not place any objects on top of it.
+ If your purchased item is equipped with a TFT console, software updates must be carried out regularly. Follow the instructions on the console to perform the update(s).
+ The software systems on gym equipment with TFT consoles are set up only for the pre-installed apps. Do not install any additional apps.

ⓘ **NOTICE**

+ The pre-installed apps on TFT consoles are produced and provided by external manufacturers. Fitshop does not take any responsibility for the availability, functionality or contents of these apps.
+ Hereby, Fitshop GmbH declares that the radio equipment type Wireless Connection (2.402 – 2.480 GHz) complies with Directive 2014/53/EU. The full text of the EU Declaration of Conformity is available at the following website: www.fitshop.com.

1.5 Set-Up Place

⚠ **WARNING**

+ Do not place the equipment in main corridors or escape routes.

⚠ **CAUTION**

+ Make sure that there is a safety area behind the treadmill with a length of at least 2 m and a width at least equal to the width of the treadmill.
+ The training room should be well ventilated during training and not be exposed to any draughts.
+ Choose the place in which to set up the equipment such that there is enough free space/ clearance to the front, the rear and to the sides of the equipment.
+ The free area in the direction from which the exercise equipment is accessed must be at least 0.6 m larger than the exercise area.
+ The set-up and mounting surface of the equipment should be flat, loadable and solid.

► **ATTENTION**

+ The device may only be used in one building, in sufficiently tempered and dry rooms (ambient temperatures between 10°C and 35°C). The equipment should not be used outdoors or in rooms with high humidity (over 70%) like swimming pools.
+ A floor protective mat/equipment underlay can help to protect high-quality floor coverings (parquet, laminate, cork, carpets) from dents and sweat and can help to level out slight unevenness.
+ For Class S equipment, the exercise equipment may only be used in areas where access, supervision and control are specifically regulated by the owner.

Recommended free zone:

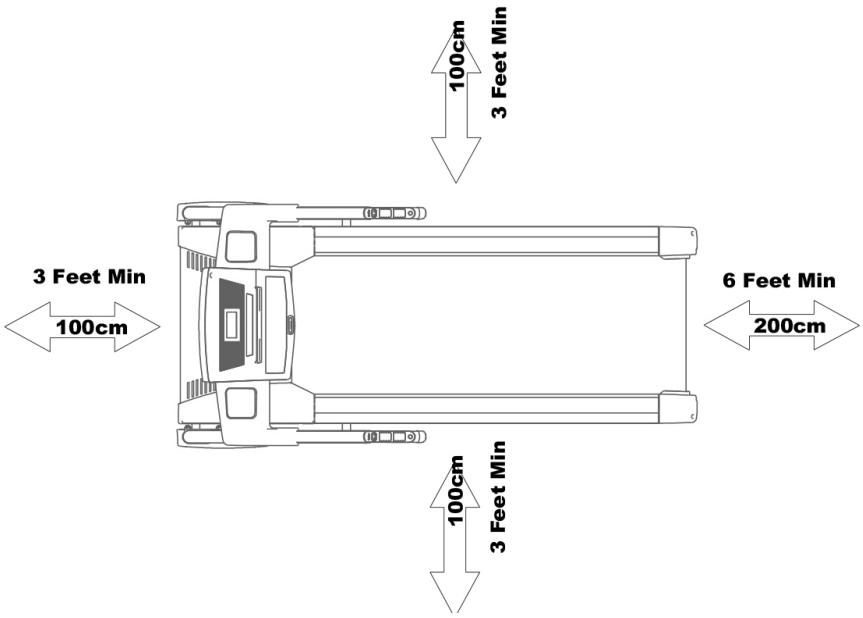

2.1 General Instructions

⚠ **DANGER**

+ Do not leave any tools, packaging materials such as foils or small parts lying around, as otherwise there is a danger of suffocation for children. Keep children away from the equipment during assembly.

⚠ **WARNING**

+ The treadmill is equipped with high-pressure shock absorbers that can cause the treadmill to suddenly open if handled incorrectly. To avoid possible personal injuries, never pull on the areas of the treadmill shown in the illustration. Never try to lift or move the treadmill at the marked areas.
+ Pay attention to the instructions attached to the equipment in order to reduce the risk of injuries.

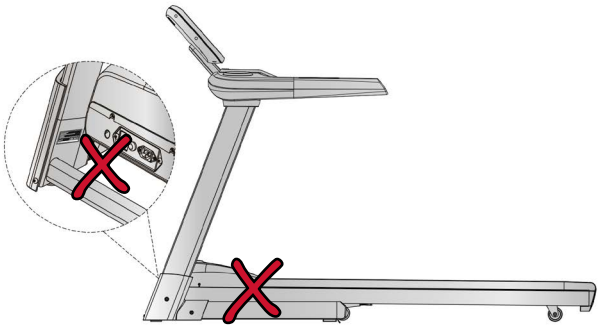

⚠ **CAUTION**

+ Ensure to have sufficient room for movement in each direction during assembly.
+ The assembly of the equipment must be carried out by at least two adults. If in doubt, seek the help of a third technically skilled person.

► **ATTENTION**

+ To prevent damage to the equipment and the floor, assemble the equipment on a mat or packaging board.

ⓘ **NOTICE**

+ In order to make the assembly as simple as possible, some screws and nuts to be used can already be pre-assembled.
+ Ideally, assemble the equipment at its later set-up place.

2.2 Scope of Delivery

⚠ **WARNING**
There is a transportation lock that prevents the treadmill from opening during transport. This transportation lock must be removed before assembly.

The scope of delivery consist of the following parts. At the beginning, check whether all parts and tools belonging to the device are included in the scope of delivery and whether damage has occurred. In the event of complaints, the contractual partner must be contacted directly.

⚠ **CAUTION**
If parts of the scope of delivery are missing or damaged, the assembly must not be carried out.

ⓘ **NOTICE**
Required tools: multitool, allen key

B05 S=13、14、15 (1X)	B06 S5 (1X)	D06 M8*55 (2X)
	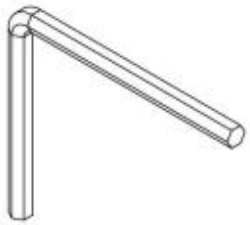	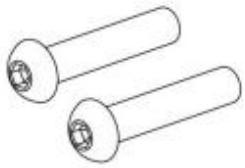
D07 M8*55 (4X)	D11 M8*15 (4X)	D30 Φ8 (4X)
D31 Φ8 (2X)		

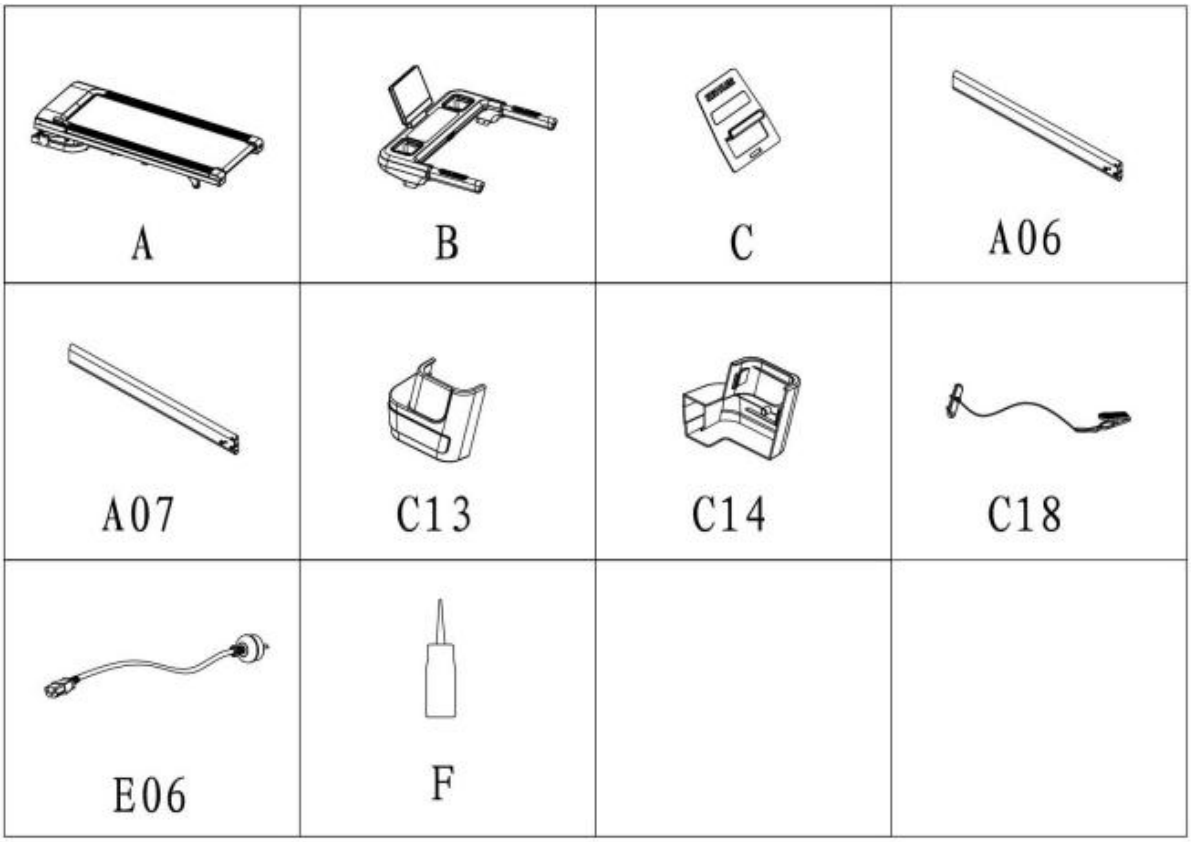

Parts list:

NO.	DES.	Nos.	NO.	DES.	Nos.
A	MAIN FRAME	1	C13	LEFT TUBE COVER	1
B	CONSOLE BASE	1	C14	UPRIGHT TUBE COVER	1
C	TABLET HOLDER	1	C18	SAFETY KEY	1
A06	LEFT UPRIGHT TUBE	1	E06	POWER WIRE	1
A07	RIGHT UPRIGHT TUBE	1	F	LUBRICATION OIL	1

2.3 Assembly

Before assembly, take a close look at the individual assembly steps shown and carry out the assembly in the order given.

ⓘ **NOTICE**

- First loosely screw all parts together and check that they fit properly. Tighten the screws using the tool only when you are instructed to do so.
- Do not tighten the screws and bolts with excessive force as they could be damaged.
- If you have difficulty recognising the graphics, we recommend that you open and/or download the PDF instructions stored in the webshop on your end device (e.g. smartphone, tablet or PC). There you have the option of zooming in closer. Please note that the Adobe Acrobat Reader programme must be installed on your end device in order to open the file.

Step 1: Remove the treadmill from the packaging

1. Take the parts of the treadmill out of the packaging.

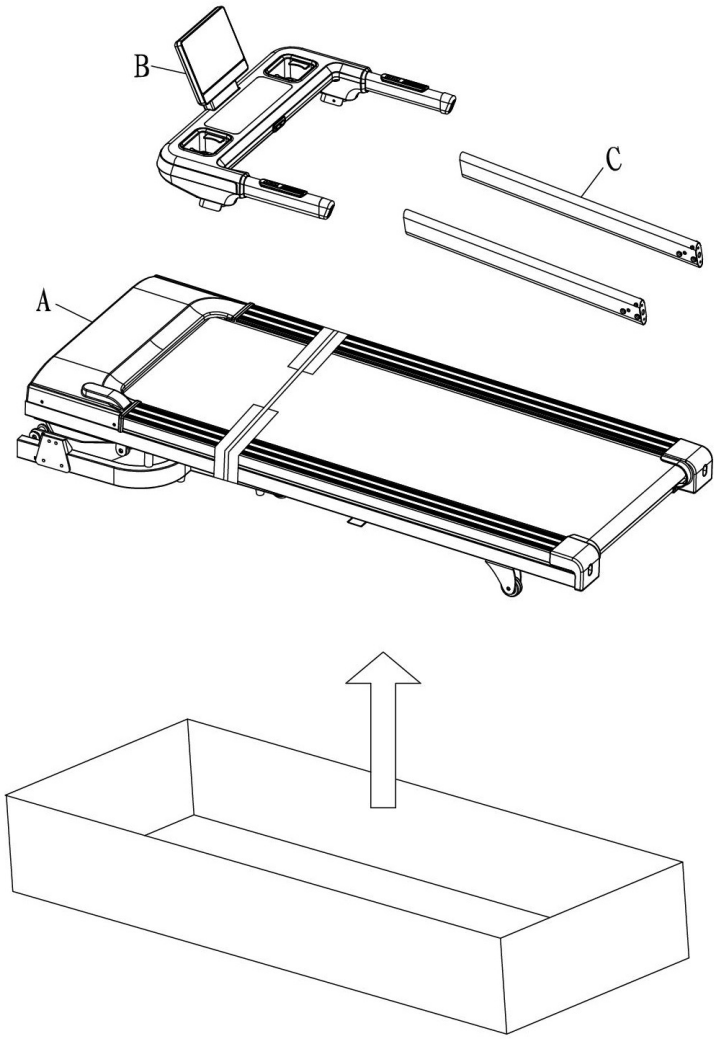

Step 2: Assembly of the upright tubes

Required tools: Allen key (B06)

► **ATTENTION**

+ Make sure not to pinch the cables.
+ Ensure that the plug connections are securely in place.

1. Connect the cable of the main frame (A) with the cable of the upright tube (A07).
2. Fix the two upright tubes (A06, A07) onto the main frame (A) with two screws (D07), one screw (D06), and one washer (D31) each.

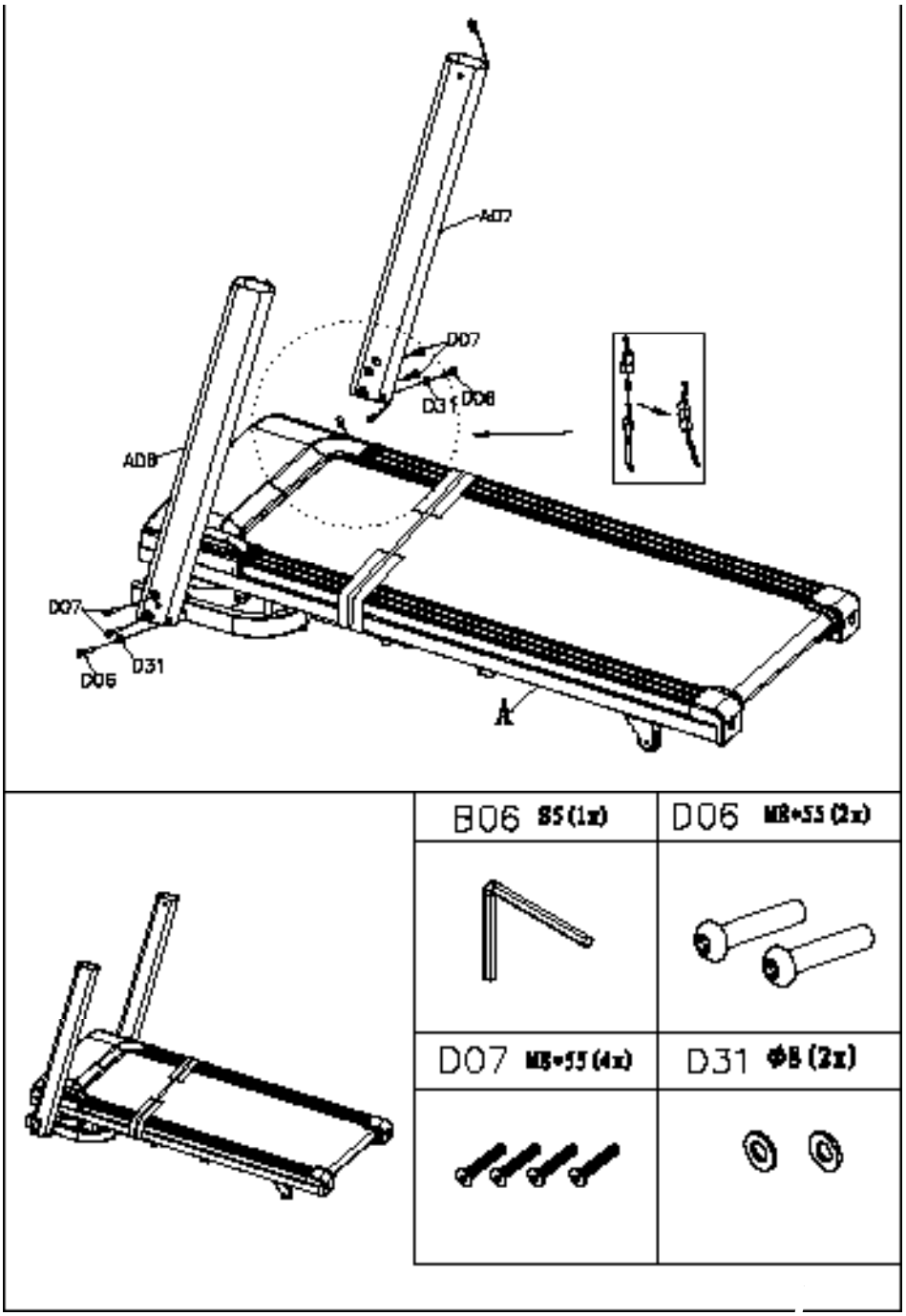

Step 3: Assembly of the console base

Required tools: Allen key (B06)

► **ATTENTION**

+ Make sure not to pinch the cables.
+ Ensure that the plug connections are securely in place.

1. Connect the cable of the upright tubes (A07) with the cable of the console base (B).
2. Mount the console base (B) onto the two upright tubes (A06, A07) using two screws (D11) and four lock washers (D30).

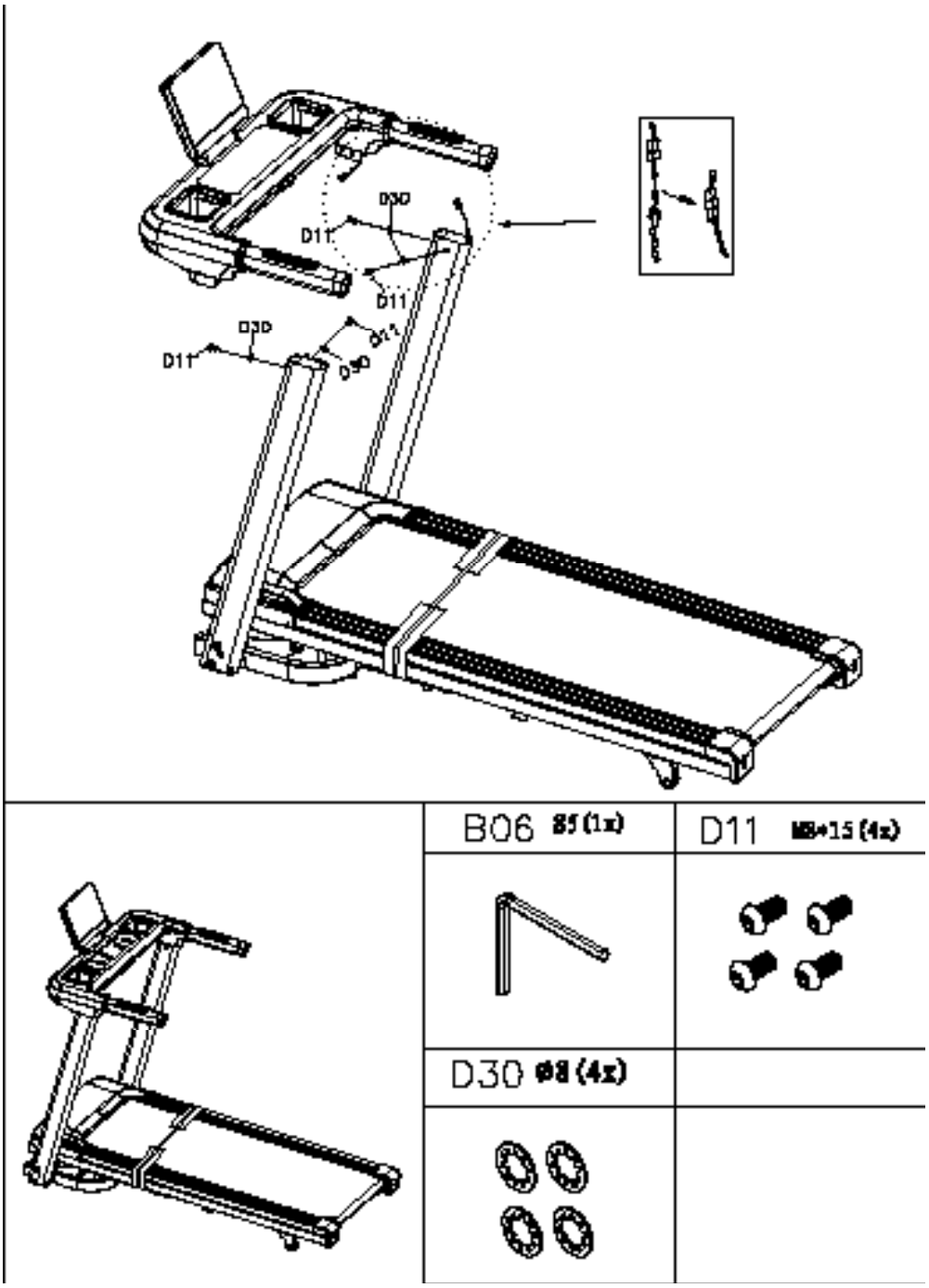

Step 4: Assembly of the covers

1. Attach the covers (C13, C14) to the two upright tubes (A06, A07).

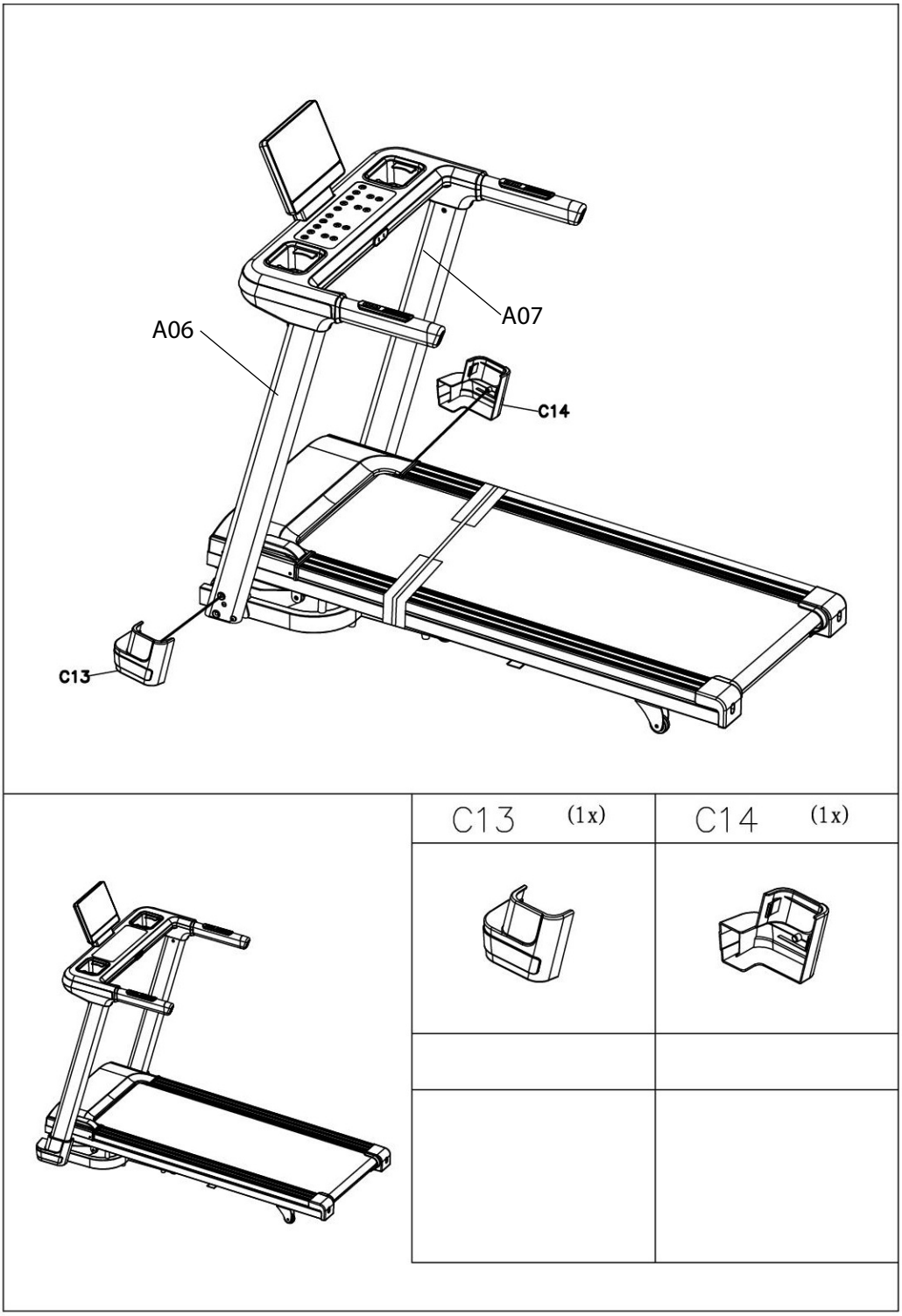

Step 5: Release the first transport lock

► **ATTENTION**

+ Do not use a utility knife for cutting. Property damage may occur.
+ Use safety scissors to release the transport lock.

1. Cut through the transport lock strap.

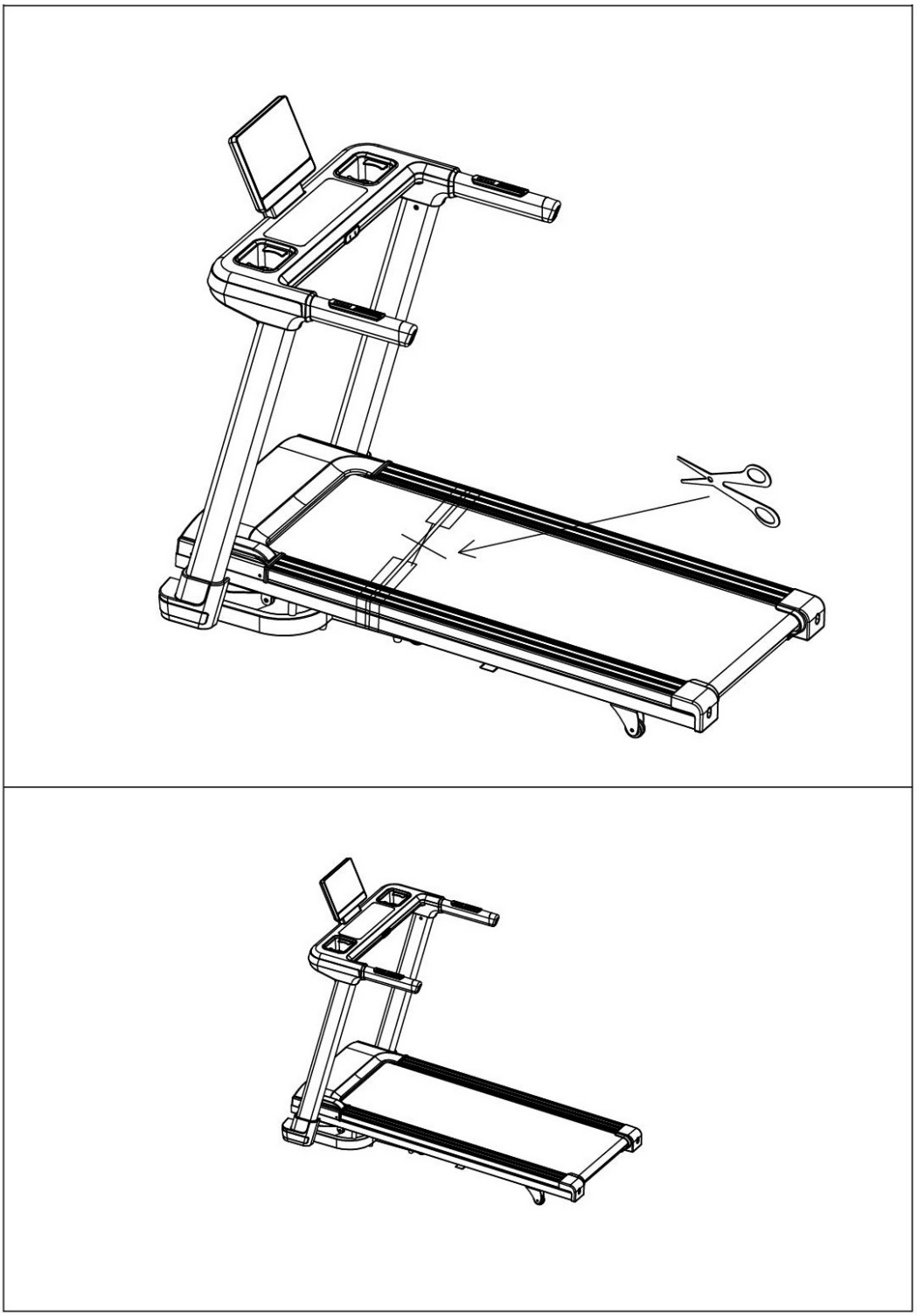

Step 6: Release the second transport lock

Required tools: Allen key (B06)

1. Release the transport lock (f) on the side of the treadmill.

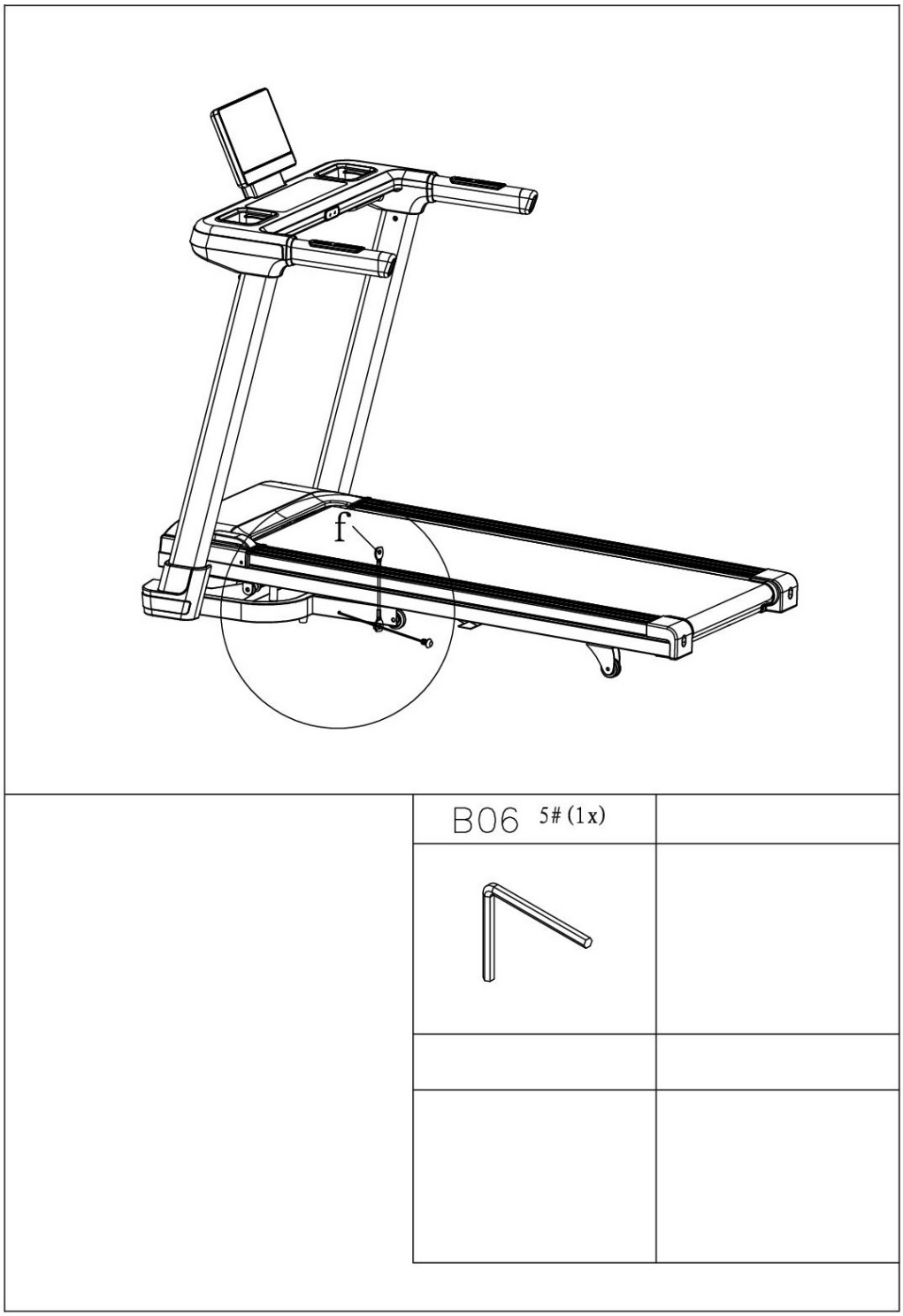

Step 7: Release the third transport lock

Required tools: Allen key (B06)

1. Release the transport lock (f) on the underside of the treadmill.

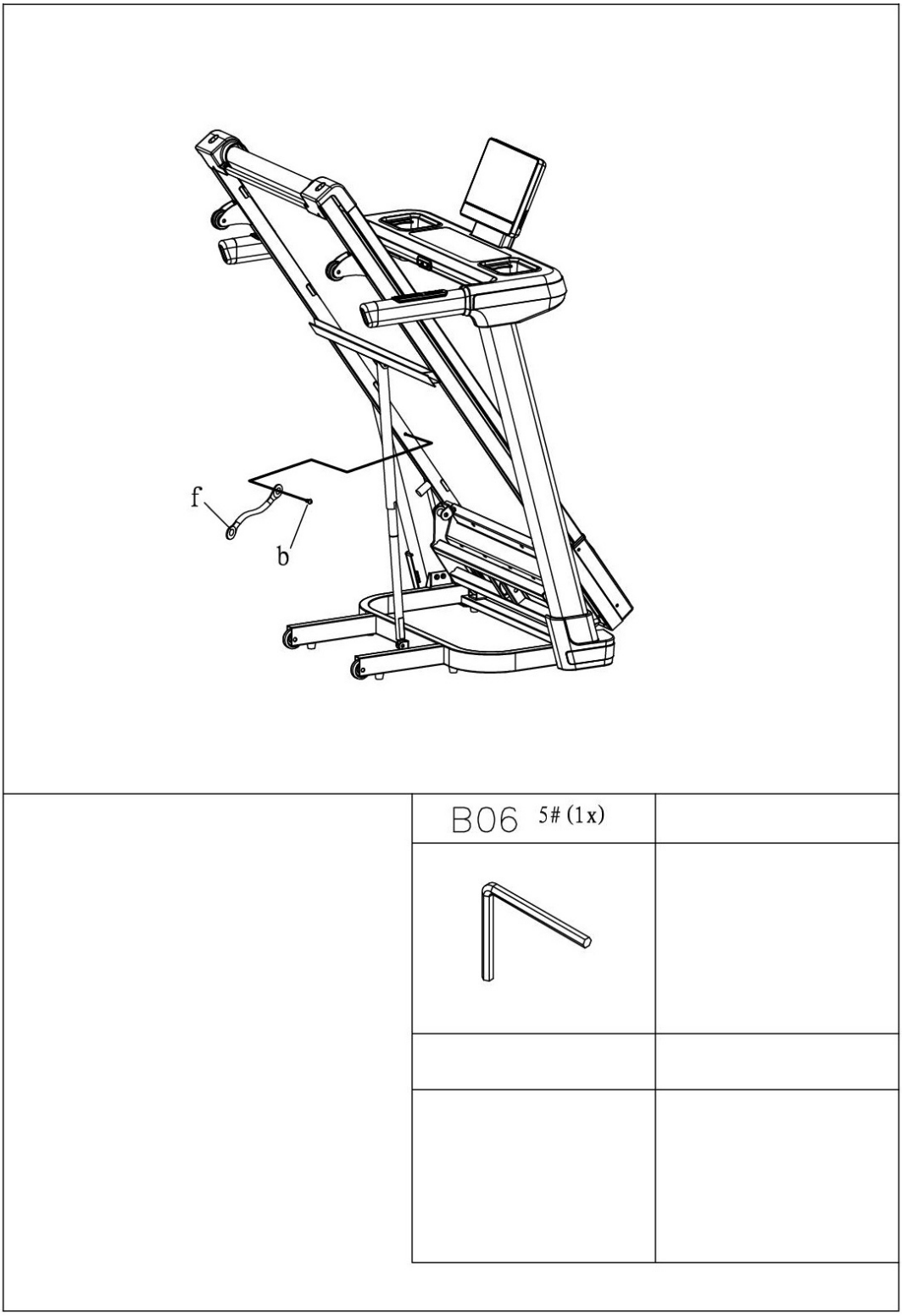

Step 8: Attaching the tablet holder

Attach the tablet holder (C) to the Console (B).

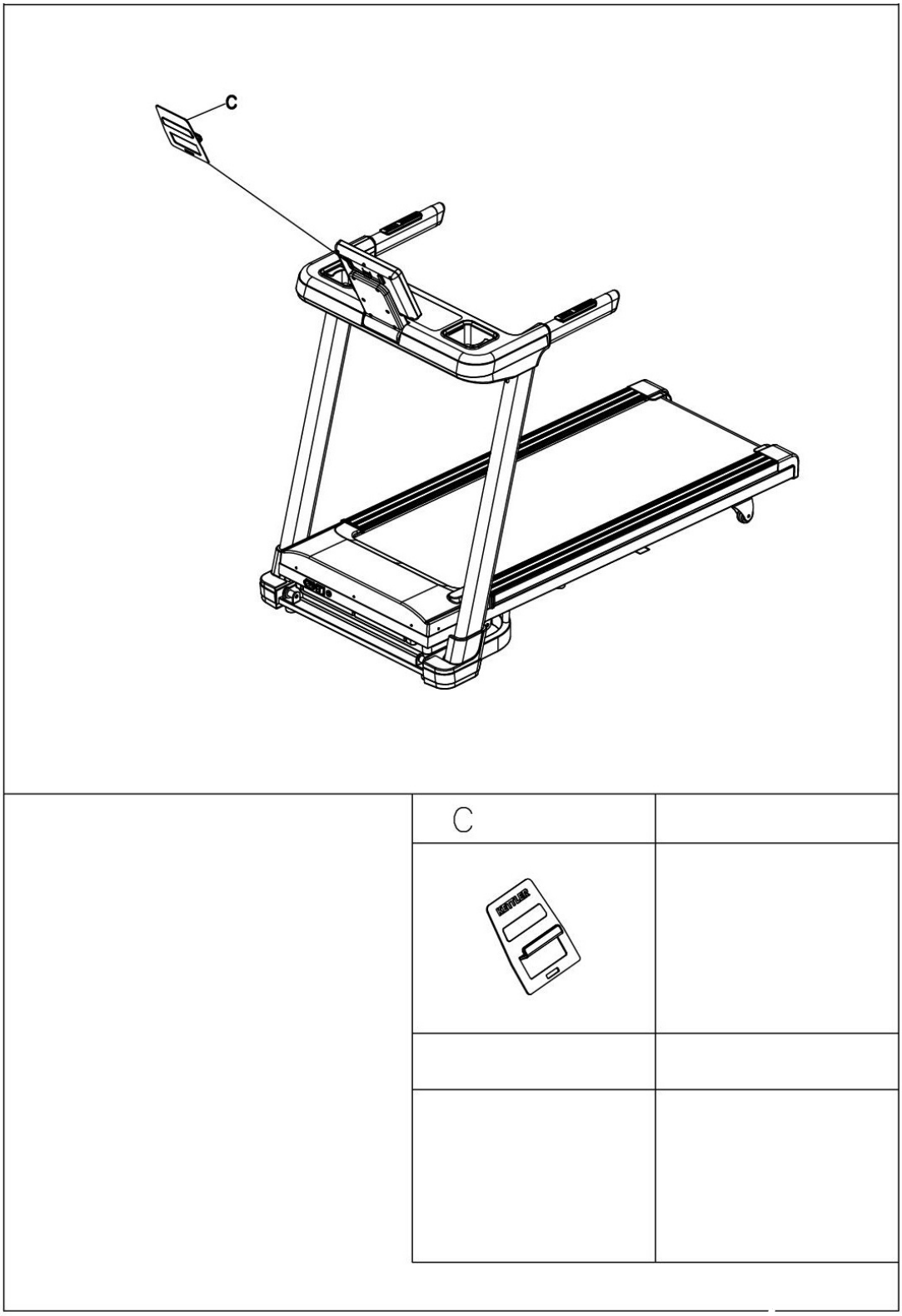

Step 9: Attach the safety key

1. Attach the safety key (C18) to the console unit.
2. Make sure all screws are tightened securely.

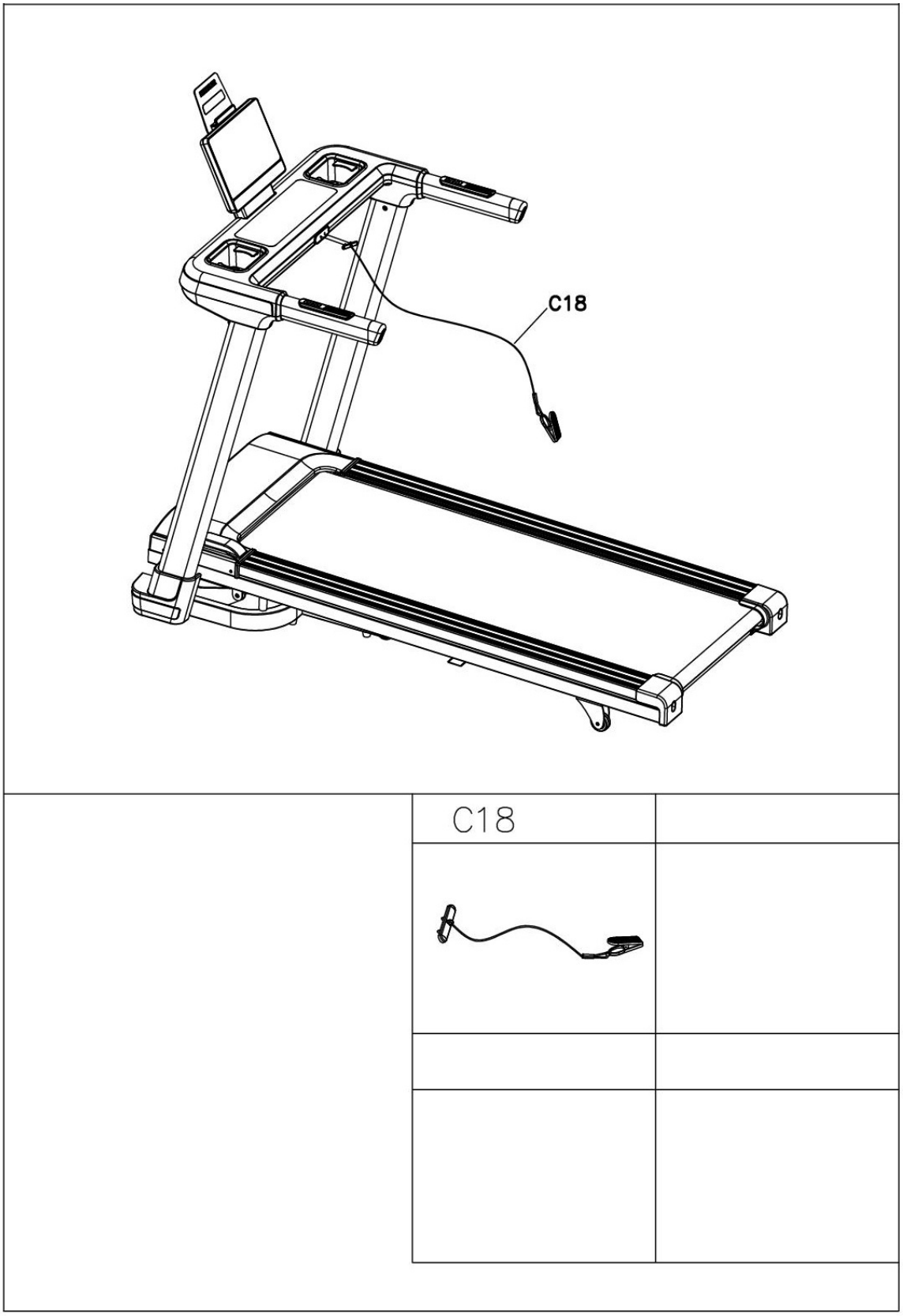

Step 10: **Alignment of the feet**

If the floor is uneven, you can stabilize the treadmill by turning the two setting screws under the main frame.

⚠ **WARNING**
The treadmill is equipped with high-pressure shock absorbers that can cause the treadmill to suddenly open if handled incorrectly. For more information, refer to the section of this manual.

1. Lift the treadmill on the desired side and rotate the setting screws under the main frame.
2. Rotate the screws clockwise in order to remove them and to raise the running surface.
3. Rotate them counterclockwise in order to lower the running surface.

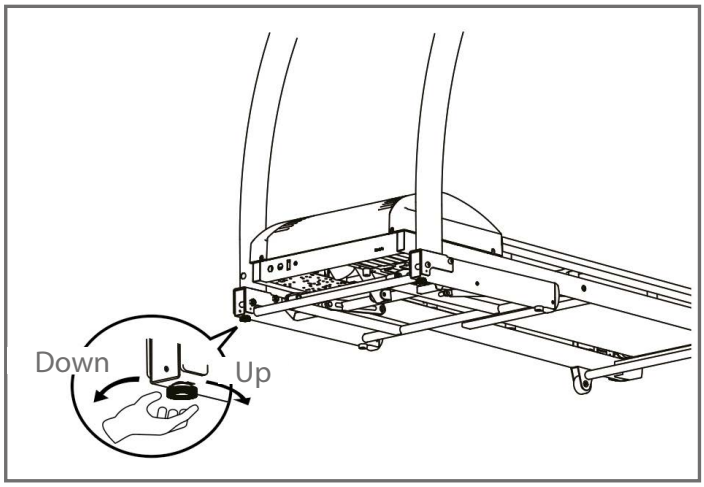

Step 11: **Connecting the equipment to the mains supply**

► **ATTENTION**
The equipment must not be connected to a multiple socket, otherwise it cannot be guaranteed that the equipment will be supplied with sufficient power. Technical errors can result.

Plug the power plug into a wall outlet that complies with the instructions in the chapter on electrical safety.

Correctly Getting On and Off

1. To step onto the treadmill, grip the handrails with both hands and step onto the treadmill one foot at a time.
2. To get off, grip the handrails with both hands and step off the treadmill one foot at a time.

NOTICE

- Familiarise yourself with all the functions and setting options of the device before starting training. Have the proper use of this product explained to you by a specialist.
- Always start your training with low intensity and increase evenly and gently. End your training with a cool-down phase. If you are unsure, please consult your physician.
- Most new treadmills make a knocking noise caused by the running mat sliding over the rollers. The time it takes for the noise to subside depends on the intensity of use, the temperature and the humidity around the treadmill.
- Please bear in mind that the noise emission under load is higher than without load.

SAFETY KEY

WARNING

- For your safety, the device is equipped with an EMERGENCY STOP function. The equipment can only be operated if the safety key is correctly attached to the contact point of the cockpit. If the safety key is no longer on the contact point, the equipment automatically stops. Therefore, the Safety Key cord with the clip must be attached to your clothing before every training session. If you want to quickly stop the treadmill, if you can no longer control the speed, or if another emergency occurs, remove the safety key from the cockpit using the cord.
- To enable the safety key to detach from the contact point of the cockpit in the event of a fall, the safety key clip must be firmly attached to your clothing!
- Make sure that the safety key is not accessible to children.

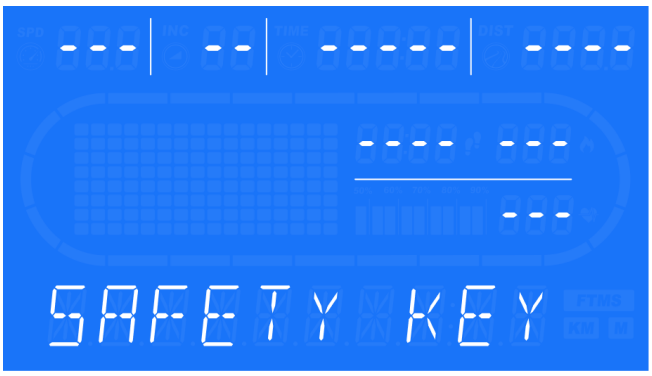

This message appears once the safety key has been pulled.

3.1 Console Overview

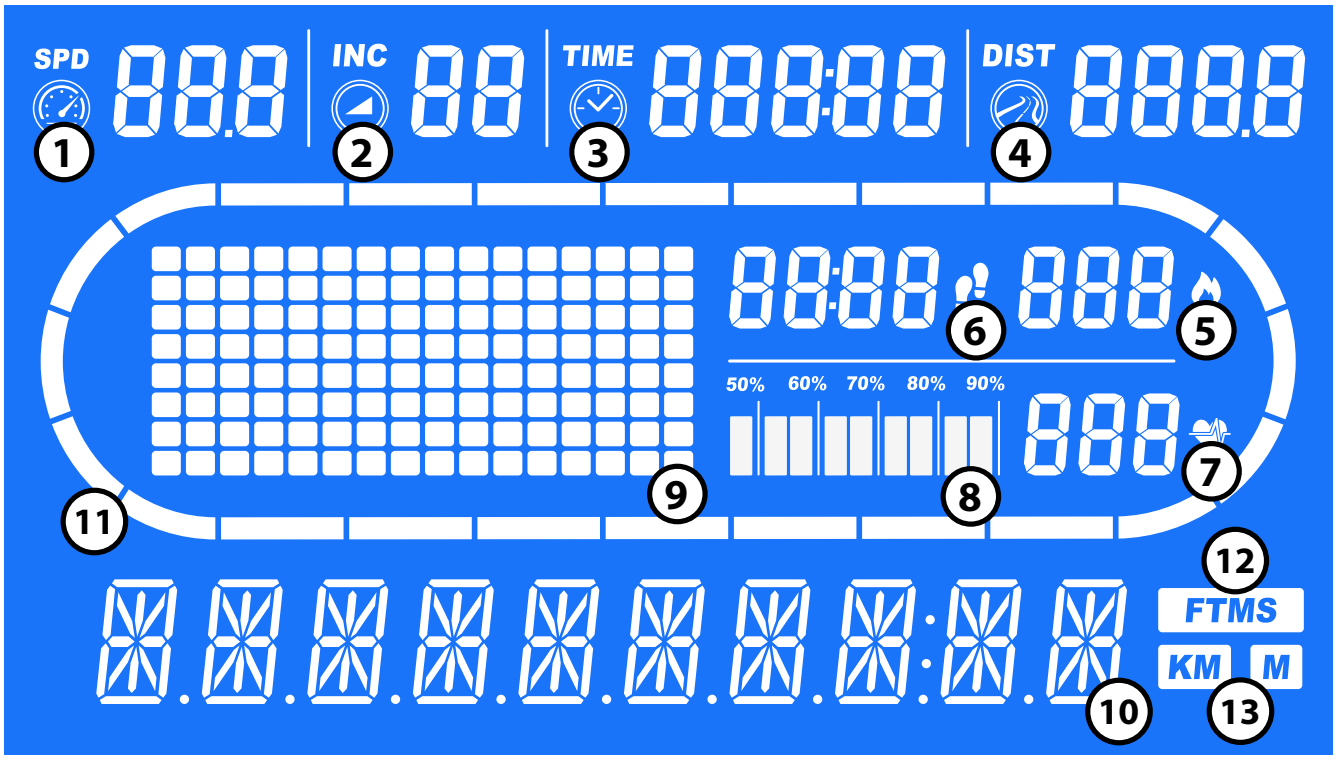

NO.	DISPLAY	NAME	FUNCTION
1	SPD	Speed	+ Displays the speed in km/h. + Display range: 0.8–16.0 km/h + Setting range: 0.8–16.0 km/h
2	INC	Incline	+ Displays the incline. + Display range: 0–12
3	TIME	Time	+ Displays the training time. + Display range: 0:00–999:59 + Setting range: 5:00–999:00 + Counts down in the target programme.
4	DIST	Distance	+ Displays the trained distance. + Display range: 0.0–999.9 + Setting range: 1.0–99.0 + Counts down in the target programme.
5	CALORIES	Calories	+ Displays the burned calories. + Display range: 0–999 + Setting range: 20–990 + Counts down in the target programme.
6	PACE	Pace	Displays the distance run per minute.

7	PULSE	Pulse	Displays your pulse if the hand pulse sensors or the chest strap are in use. (Chest strap is not part of the scope of delivery)
8	PERCENT	Percent	Indicates the percentage range in which your heart rate is in relation to your target heart rate.
9	MATRIX (DM)	Performance profile	Displays messages, programme parameters, and performance profiles.
10	MESSAGE WINDOW (MW)	Message window	+ Displays messages. + Displays the current status.
11	RACE-TRACK	Race track	+ Illustration of the race track. + Consists of 24 segments.
12	FTMS	FTMS	Displays whether a wireless connetion is established.
13	KM/M	Kilometers/Miles	Displays the unit in which the data is displayed.

3.2 Button Functions

DISPLAY	BUTTON	FUNCTION
DOWN	DOWN (INCLINE)	+ Move down within a selection. + Decrease the incline during training.
UP	UP (INCLINE)	+ Move up within a selection. + Increase the incline during training.
PROG	PROG	Select a training programme. Refer to chapter 3.5.
START PAUSE	START/PAUSE	+ Start a training session. + Pause the active training session.
STOP RESET	STOP/RESET	+ Stop the active training session. + Long press the button to initiate a reset.

ENTER	**ENTER**	Confirm a setting.
DOWN	**DOWN (SPEED)**	+ Move down within a selection. + Decrease the speed during training.
UP	**UP (SPEED)**	+ Move up within a selection. + Increase the speed during training.

3.3 Quick Keys

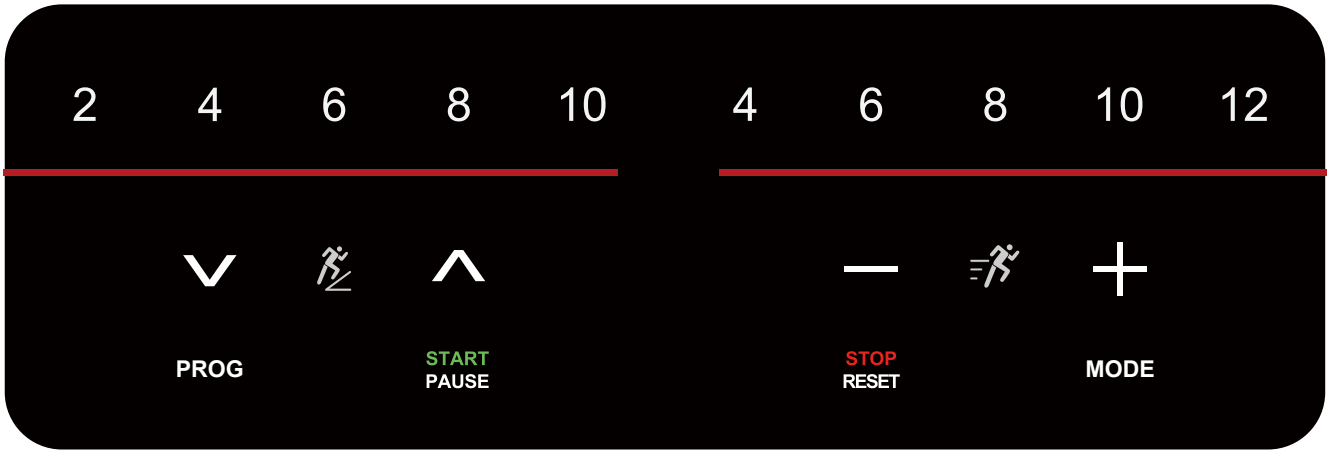

BUTTON	QUICK KEY FUNCTION
2-10 %	Set the incline.
	Set the incline.
PROG	Select a training programme.
START PAUSE	Start a training session.
4-12 km/h	Set the speed.
	Set the speed.

MODE	+ Press the button in standby to switch between the target programmes. + Switch the displayed data during the training session. + Switch between the speed profile view and the incline profile view in preset or user-defined programs.
STOP RESET	+ Pause the active training session. + Press the button in pause mode to end the training session. + Long press the button to initiate a reset.

3.4 Display Modes

MODE	FUNCTION
STANDBY	+ No training programme is in use. All values display **0**. + After 5 minutes of inactivity in training mode, the console enters sleep mode. + Choose a training programme.
SLEEP MODE	+ This is the sleep mode that the console enters after 5 minutes of inactivity in standby. + The console is not lit up and no data is displayed. + To exit sleep mode, press any button on the device.
TRAINING MODE	+ This display appears during the training session. + Your training data will be displayed in training mode. + The displayed data switches every 5 seconds. + Complete/Stop the training session to enter standby.
PAUSE MODE	+ This display appears in pause mode. + To exit pause mode, continue your training session.
TRAINING OVERVIEW	+ Displays an overview of your training data. + After 5 minutes of inactivity in training mode, the console enters standby.

3.5 Training Programmes

Your device offers a selection of training programmes to ensure you reach your training goals. The following training programmes can be accessed:

PROGRAMME	DESCRIPTION	QUANTITY
QUICK START	Manual training without preset settings.	1
TARGET PROGRAMMES	Set a target value for your training session. The value starts to count down.	3

PRESET PROGRAMMES	Training with preset profiles. Adjust the training data in advance, if desired.	24
USER-DEFINED PROGRAMMES	Create a personal training programme.	3
HEART RATE CONTROLLED PROGRAMMES	The incline and speed are adjusted according to your set target heart rate.	3

In the following subchapters you will find detailed descriptions of the training programmes.

3.5.1 Quick Start

To start a training session without preset settings, choose quick start.

How to start quick start:

1. Press START/PAUSE in standby mode.

The device starts at the minimum speed. The values count upward. A countdown appears: 3-2-1-GO.

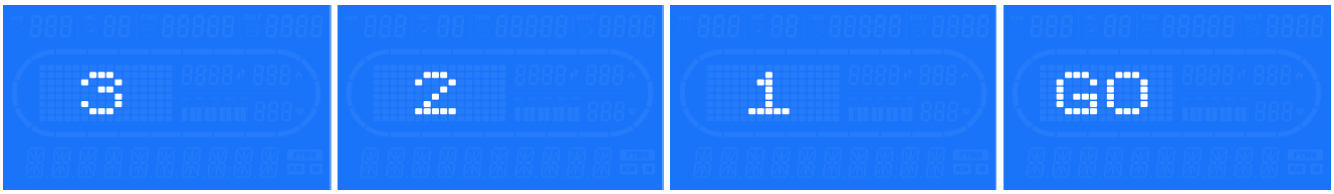

2. Set the speed and incline with the according buttons.

ⓘ **NOTICE**
The current training data are displayed throughout the training session.

3. To stop the training session, press STOP/PAUSE.

The device stops. The current incline remains.

ⓘ **NOTICE**
If no button is pressed in pause mode within 5 minutes, the device automatically stops the training session and switches to standby mode.

4. To continue the training session, press START.
5. To end the training session, press STOP/RESET during the training session or in pause mode.

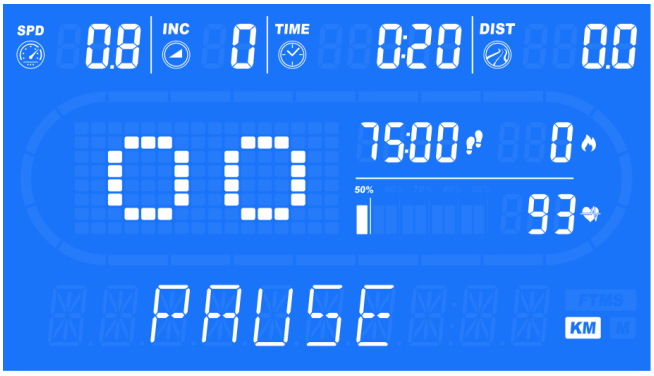

The device stops and END appears in the display.

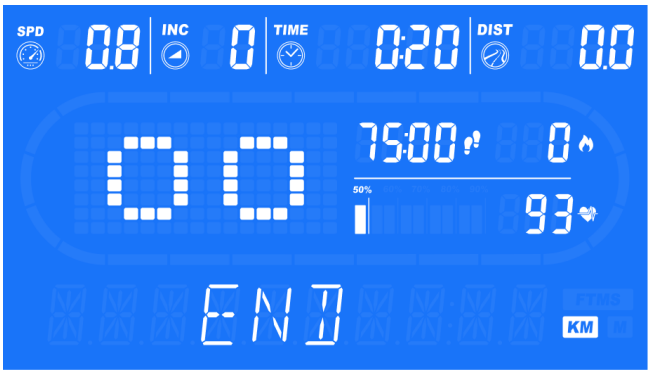

→ ***After a couple seconds the device enters standby mode.***

3.5.2 Target Programmes

The device offers three target programmes. The parameters time, distance or calories are counted down. Per training session only one target programme can be set.

How to start target programmes:

1. Press MODE in standby mode to select one of the following target programmes:
   + Time countdown
   + Distance countdown
   + Calories countdown
2. To set the value, press the quick keys ^/v.
3. To start the training session, press START.

A countdown appears: 3-2-1-GO.

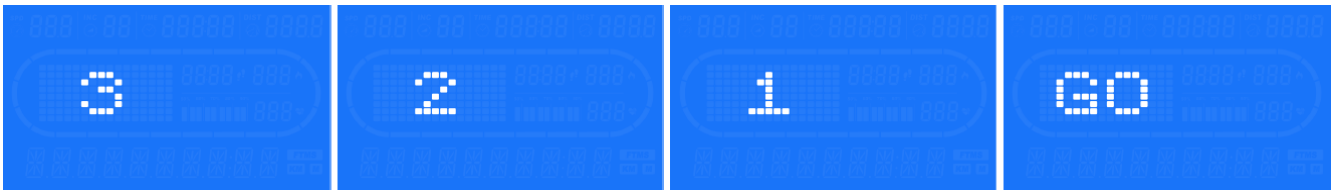

ⓘ **NOTICE**
The device starts *at the minimum* speed and incline.

4. The speed and incline can be adjusted during the training session.
5. Set the desired speed and incline with the according buttons.

ⓘ **NOTICE**
The current training data are displayed throughout the training session.

6. To stop the training session, press STOP/PAUSE.

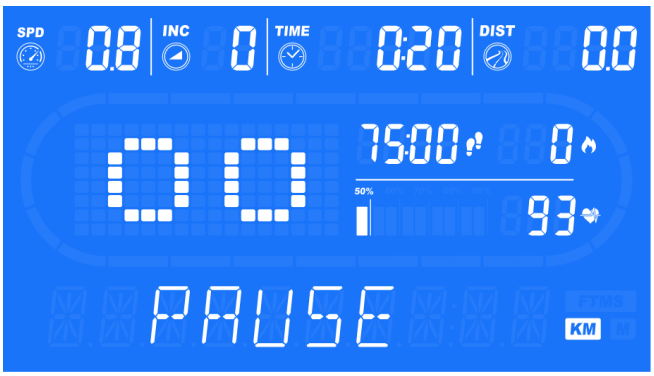

The device stops. The current incline remains.

ⓘ **NOTICE**
If no button is pressed in pause mode within 5 minutes, the device automatically stops the training session and switches to standby mode.

7. To continue the training session, press START.
8. To end the training session, press STOP/RESET during the training session or in pause mode.
9. The training session ends automatically once the set target value reaches 0.

The device stops and END appears in the display.

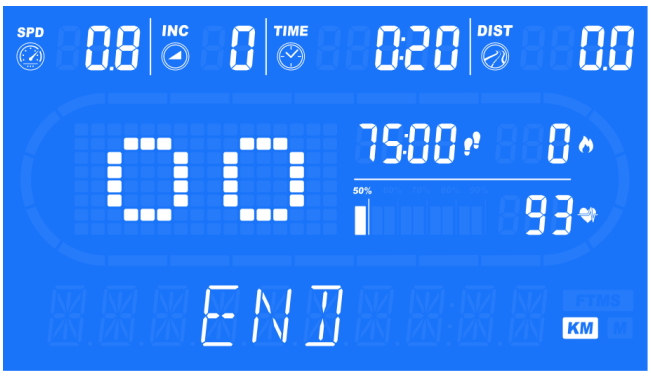

→ ***After a couple seconds the device enters standby mode.***

3.5.3 Preset Programmes

The device offers 24 preset profile programmes (P1–P24). Each programme consists of multiple segments with set speed and incline values.

How to start a preset programme:

1. To enter the programme selection, press PROG in standby mode.
2. To choose a programme (P1 – P24), press the quick keys ^/v.
3. To enter the programme settings, press ENTER.
4. To set the desired training time, press +/– or ^/v.

ⓘ **NOTICE**
The training time is evenly distributed among all training segments.

5. If no changes have been made and START is pressed, the training session will start with the preset default time.

A countdown appears: 3-2-1-GO.

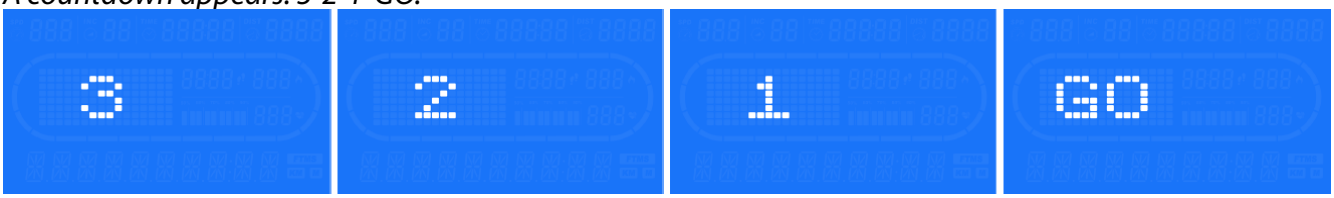

ⓘ **NOTICE**
The speed and incline adjust automatically according to the profile.

6. During the training session, you can set the speed and incline of the current segment with the according buttons.
7. To switch between the speed and incline profile, press MODE.
8. To stop the training session, press STOP/PAUSE.

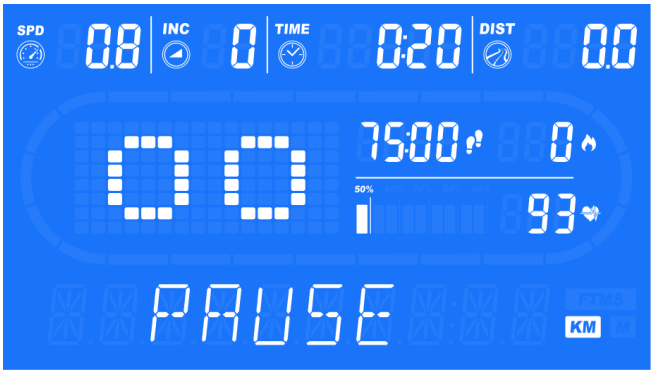

The device stops. The current incline remains.

ⓘ **NOTICE**
If no button is pressed in pause mode within 5 minutes, the device automatically stops the training session and switches to standby mode.

9. To continue the training session, press START.
10. To end the training session, press STOP/RESET during the training session or in pause mode.
11. The training session ends automatically once the set time is over.

The device stops and END appears in the display.

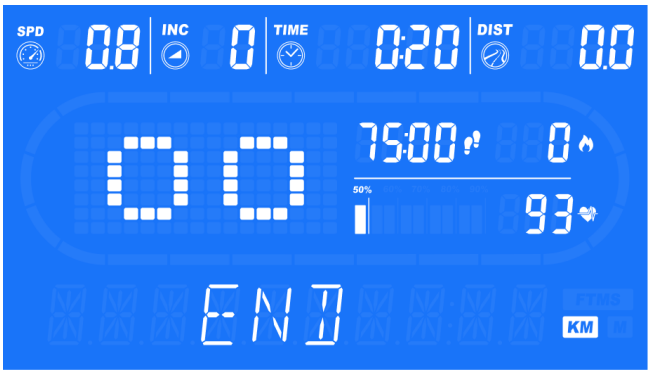

→ ***After a couple seconds the device enters standby mode.***

3.5.4 User-Defined Programmes

The user-programmes allow you to create and save training profiles with individually set speed and incline values. The device offers three user-programmes (U1–U3).

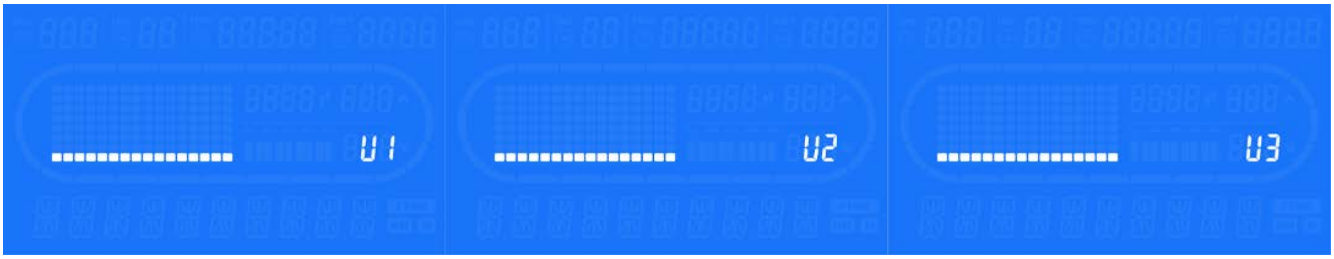

How to start a user-programme:

1. To enter the programme selection, press PROG in standby mode.
2. To choose a programme U1–U3, press the quick keys ^/v.
3. To enter the programme settings, press ENTER.
4. To set the desired training time, press +/– or ^/v.

ⓘ **NOTICE**
The training time is evenly distributed among all training segments.

5. If no changes have been made and START is pressed, the training session will start with the preset default time.
6. Set the desired training time for each segment with +/–, ^/v or the quick keys.
7. Confirm each segment with ENTER and continue with the next segment.
8. Set the desired incline for each segment with +/–, ^/v or the quick keys.
9. Confirm each segment with ENTER.
10. To start the training session, press START.

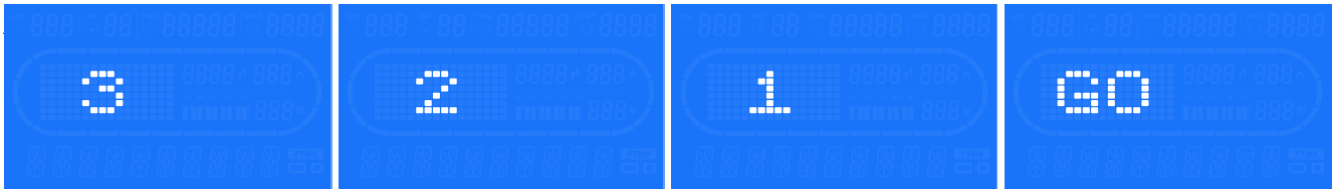

ⓘ **NOTICE**
The speed and incline adjust automatically according to the profile.

11. During the training session, you can set the speed and incline of the current segment with the according buttons.
12. To switch between the speed and incline profile, press MODE.

13. To stop the training session, press STOP/PAUSE.

The device stops. The current incline remains.

ⓘ **NOTICE**
If no button is pressed in pause mode within 5 minutes, the device automatically stops the training session and switches to standby mode.

14. To continue the training session, press START.
15. To end the training session, press STOP/PAUSE during the training session or in pause mode.
16. The training session ends automatically once the set time is over.

The device stops and END appears in the display.

→ ***After a couple seconds the device enters standby mode.***

3.5.5 Heart Rate Controlled Programmes

⚠ **WARNING**

Your training equipment is not a medical device. The heart rate measurement of this equipment may be inaccurate. Various factors can affect the accuracy of the heart rate measurement. The heart rate measurement serves only as a training aid.

With the heart rate programmes, you train based on your heart rate. The speed is automatically adjusted to maintain the target heart rate.

+ HRC1: 60 % of the target pulse
+ HRC2: 70 % of the target pulse
+ HRC3: 85 % of the target pulse

ⓘ **NOTICE**

+ The target pulse is calculated based on your age.
+ If desired, you can set the target pulse.

How to start the heart rate controlled programmes:

1. To enter the programme selection, press PROG in standby mode.
2. To choose a programme HRC1–HRC3, press the quick keys ^/v.
3. To enter the programme settings, press ENTER.
4. To set the desired training time, press +/– or ^/v.

ⓘ **NOTICE**

If no changes have been made and START is pressed, the training session will start with the preset default time.

5. To set your age, press +/– or ^/v.

The target pulse will be adjusted automatically.

6. If desired, you can set the target pulse with +/– or ^/v.
7. To start the training session, press START.

A countdown appears: 3-2-1-GO.

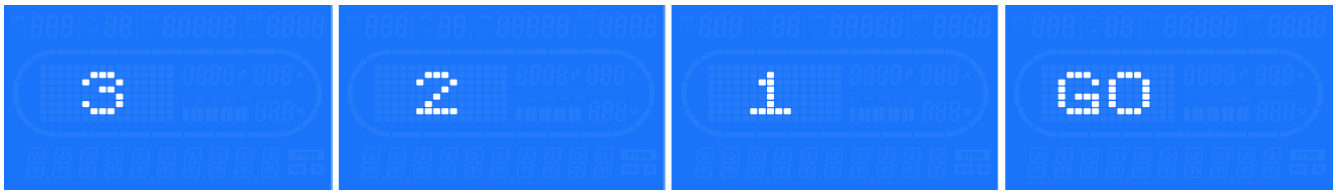

ⓘ **NOTICE**

+ The speed is automatically regulated to maintain the target heart rate.

+ The heart rate controlled programme can be started without a heart rate signal.
+ If no heart rate signal is detected within a short time, the device automatically ends the training session.

8. The incline can be set manually.
9. To stop the training session, press STOP/PAUSE.

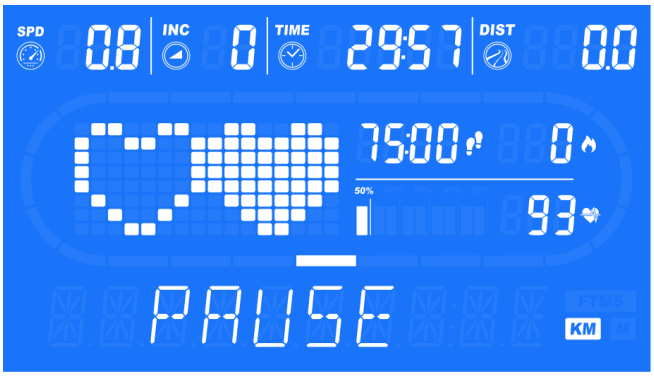

The device stops. The current incline remains.

ⓘ **NOTICE**
If no button is pressed in pause mode within 5 minutes, the device automatically stops the training session and switches to standby mode.

10. To continue the training session, press START.
11. To end the training session, press STOP/PAUSE during the training session or in pause mode.
12. The training session ends automatically once the set time is over.

The device stops and END appears in the display.

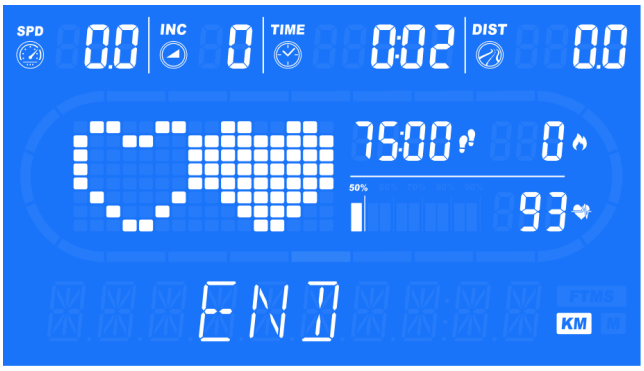

→ ***After a couple seconds the device enters standby mode.***

3.6 Programme Table

In this table, you will find an overview of the segments of the preset training programmes.

Programme		Set Time / 16 = Runtime per Segment															
		1	2	3	4	5	6	7	8	9	10	11	12	13	14	15	16
P1	SPEED	1	2	2	3	3	3	4	5	7	6	5	4	4	3	2	2
	INCLINE	0	0	0	0	0	0	0	0	0	0	0	0	0	0	0	0
P2	SPEED	1	2	2	3	4	4	5	6	10	8	8	5	5	3	2	2
	INCLINE	0	0	0	0	0	0	0	0	0	0	0	0	0	0	0	0
P3	SPEED	1	2	3	4	5	5	6	8	12	10	8	7	6	4	3	2
	INCLINE	0	0	0	0	0	0	0	0	0	0	0	0	0	0	0	0
P4	SPEED	1	2	3	4	6	7	8	10	13	11	10	8	7	5	4	2
	INCLINE	0	0	0	0	0	0	0	0	0	0	0	0	0	0	0	0
P5	SPEED	2	3	4	5	7	7	8	10	14	13	12	10	9	6	4	2
	INCLINE	0	0	0	0	0	0	0	0	0	0	0	0	0	0	0	0
P6	SPEED	2	3	4	5	7	9	10	12	14	13	12	10	9	6	5	3
	INCLINE	1	1	2	2	4	4	5	2	6	6	3	3	2	2	3	3
P7	SPEED	2	3	5	6	8	9	10	12	15	13	12	10	9	6	6	3
	INCLINE	2	2	3	3	4	4	4	3	5	5	2	2	5	5	2	2
P8	SPEED	2	3	5	6	8	10	12	14	15	14	13	11	9	7	6	3
	INCLINE	1	1	2	2	2	2	3	1	1	1	2	2	1	1	2	2
P9	SPEED	1	1	2	2	3	4	5	6	7	6	6	4	3	2	1	1
	INCLINE	1	1	2	3	4	5	6	7	8	7	7	5	4	2	1	1
P10	SPEED	1	2	2	3	4	5	6	7	8	7	7	5	4	2	2	1
	INCLINE	1	2	3	4	5	6	7	8	9	8	8	6	5	3	2	1
P11	SPEED	1	2	3	4	5	6	7	8	9	8	8	6	5	3	2	1
	INCLINE	1	2	4	5	6	7	8	9	10	9	9	7	6	4	2	1
P12	SPEED	2	2	4	5	6	7	8	9	10	9	9	7	6	4	2	2
	INCLINE	2	3	5	6	7	8	9	10	11	10	10	8	7	5	3	2
P13	SPEED	2	3	5	6	7	8	9	10	11	10	10	8	7	5	3	2
	INCLINE	2	4	6	7	8	9	10	11	12	11	11	9	8	6	4	2
P14	SPEED	2	4	6	7	8	9	10	11	12	11	11	9	8	6	4	2
	INCLINE	3	5	7	8	9	10	11	12	12	12	12	10	9	7	5	3

P15	SPEED	3	5	7	8	9	10	11	12	13	12	12	10	9	7	5	3
	INCLINE	4	6	8	9	10	11	12	12	12	12	12	11	10	8	6	4
P16	SPEED	4	6	8	9	10	11	12	13	14	13	13	11	10	8	6	4
	INCLINE	5	7	9	10	11	12	12	12	12	12	12	12	11	9	7	5
P17	SPEED	1	2	3	3	5	6	7	8	8	7	7	5	4	3	2	1
	INCLINE	1	1	2	2	3	3	4	5	5	4	4	3	2	2	1	1
P18	SPEED	1	2	3	4	5	7	8	9	9	8	8	6	5	3	2	1
	INCLINE	1	1	2	2	3	4	5	6	6	5	5	4	3	2	1	1
P19	SPEED	1	2	4	5	7	8	9	10	10	9	9	7	6	4	2	1
	INCLINE	1	1	2	3	4	5	6	7	7	6	6	4	3	2	1	1
P20	SPEED	2	3	5	6	8	9	10	11	11	10	10	8	7	5	3	2
	INCLINE	1	2	3	4	5	6	7	8	8	7	7	5	4	3	2	1
P21	SPEED	2	4	6	7	9	10	11	12	12	11	11	9	8	6	4	2
	INCLINE	1	2	3	4	6	7	8	9	9	8	8	6	5	3	2	1
P22	SPEED	3	5	7	8	10	11	12	13	13	12	12	10	9	7	5	3
	INCLINE	2	3	4	5	7	8	9	10	10	9	9	7	6	4	3	2
P23	SPEED	4	6	8	9	11	12	13	14	14	13	13	11	10	8	6	4
	INCLINE	2	3	5	6	8	9	10	11	11	10	10	8	7	5	3	2
P24	SPEED	4	7	9	10	12	13	14	15	15	14	14	12	11	9	7	4
	INCLINE	2	4	6	7	9	10	11	12	12	11	11	9	8	6	4	2

3.7 USB-C Connection

ⓘ **NOTICE**
Charge your mobile device with the console – you need a USB-C cable. (Not included in the scope of delivery)

3.8 Lubrication Reminder

The device features a reminder function that prompts you to lubricate the belt after 300 km.

ⓘ **NOTICE**
After the lubrication is complete, press STOP/PAUSE for three seconds.

→ ***The lubrication reminder disappears.***

4.1 General Instructions

When training, it is important to perform the exercises correctly in order to avoid injuries and achieve the desired training effect. Make sure you use the correct technique and train at an appropriate intensity level. Always consult an expert such as a trainer or doctor if you are unsure or have health problems. Always start your training with a low load and increase it evenly and gently.
End your training with a cool-down phase. If you have any questions or uncertainties, contact your doctor.

4.1.1 Training clothes

During training, wear appropriate sports clothing that is comfortable and breathable. Avoid clothing that restricts you or is uncomfortable. Make sure that your shoes are suitable and offer you sufficient support. In addition, always carry a towel with you to wipe away sweat and keep the equipment clean.

4.1.2 Warming up and stretching

It is important to warm up and stretch properly before training to avoid injury and improve performance. Stretching helps to loosen muscles and improve flexibility. Be sure to incorporate a short stretching routine before each workout.

Warm-up exercise:

1. Stand upright with your feet about shoulder-width apart.
2. Start with gentle arm circles by slowly moving your arms forwards in small circles in a controlled manner.
3. Perform arm circles backwards to loosen your shoulders and arms.
4. Do squats by slowly squatting down and then straightening up again. Make sure that your knees do not extend beyond your toes.

⚠ **CAUTION**
Do not exercise with sore muscles or take it easy on the affected muscles, as this can lead to injuries.

4.1.3 Medication

If you regularly take medication and want to exercise, it is important to be aware of possible side effects. Ask your doctor whether your medication affects your workout.

4.1.4 Used muscle groups

Rowing uses the following muscle groups:

+ Gluteal muscle
+ Leg muscles

Make sure you keep your back straight during training. Do not hunch over and do not arch your back.

4.1.5 Exercise frequency

Regular exercise is crucial to making progress and staying healthy in the long term. Continuous exercise can strengthen muscles, improve endurance and enhance overall well-being. Remember that even small workouts can be done regularly to achieve long-term results.

Training with heart rate orientation
Heart rate orientation guarantees an extremely effective and healthy training. Through your age and the following table, you can quickly and easily read and determine the optimal pulse for your training. An acoustic alarm will sound if your heart rate exceeds the set target heart rate. Which target heart rate is important for which training goal can be found out in the following.

Fat burning (weight management): The main goal here is to burn deposits of fat. In order to achieve this training goal, a low training intensity (approximately 55% of the maximum heart rate) and a longer training period are required.

Cardiovascular training (cardio training): The primary goal is to increase stamina and fitness through an improved provision of oxygen through the cardiovascular system. In order to achieve this training goal, medium intensity (approximately 75% of the maximum heart rate) with a medium training period is required.

Anaerobic (maximum) load training: The main goal of maximum load training is to improve recovery after short, intense loads in order to be able to quickly return to the aerobic zone. In order to achieve this training goal, a high intensity (approximately 90% of the maximum heart rate) with short, intense load is required, which is followed by a recovery phase in order to prevent muscle fatigue.

Example:
For a 45-year-old man, the maximum heart rate is 175 (220 - 45 = 175).

+ The fat burning target zone (55%) is at approximately 96 beats/min. = (220 - age) x 0.55.
+ The cardio target zone (75%) is at approximately 131 beats/min. = (220 - age) x 0.75.
+ The maximum heart rate for an anaerobic load training (90%) is at approximately 157 beats/min. = (220 - age) x 0.9.

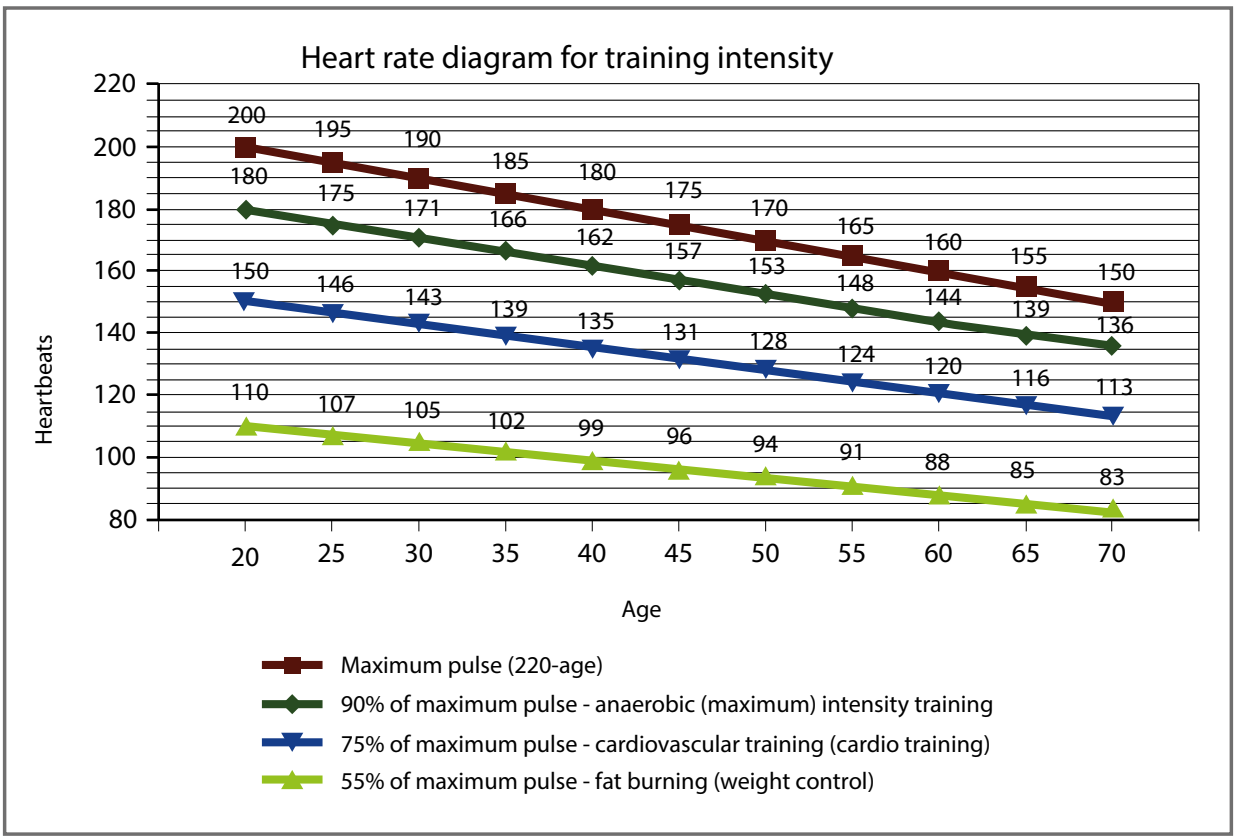

4.2 Workout journal

(Copy template)

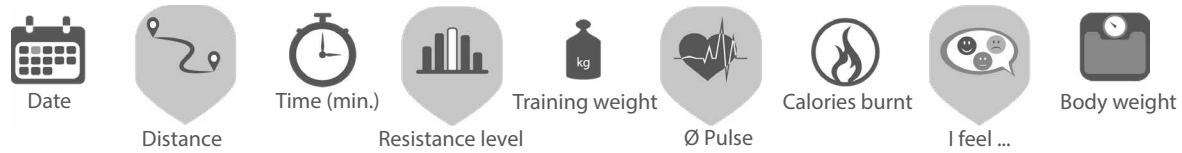

4.3 Wireless Connection and Fitness Apps

This console is equipped with a wireless interface. Please take note that your mobile device needs to be compatible with the wireless interface of the treadmill.

To use training apps you will have to activate the wireless connection function on your mobile device (tablet or smart phone) and start the fitness app. Select your fitness equipment. Please follow the instructions given in the app. You will find the name of your fitness euqipment on a small sticker on the back of the console.

You will find the fitness apps in the app stores of Google or Apple. There you will find the apps "Kinomap" or "Zwift". Please note that these apps are produced by an external manufacturer. Fitshop does not take any responsibility regarding the availability, functionality or contents of these programmes.

ⓘ IMPORTANT NOTE

Some entertainment apps are provided and maintained by third-party providers. Pre-installed apps may change, be updated, or be removed over time. These changes are normal and do not affect your statutory warranty rights. To make sure the pre-installed apps are working correctly, they must be updated regularly. If needed, the respective app will notify you to do so. To update the app, you need a google account. A google email is sufficient. Just follow the instructions on the screen to perform the update. Please note: The system is set up only for the pre-installed apps. Do not install any additional apps as their proper functionality can not be guaranteed. The installation of other apps might cause technical issues.

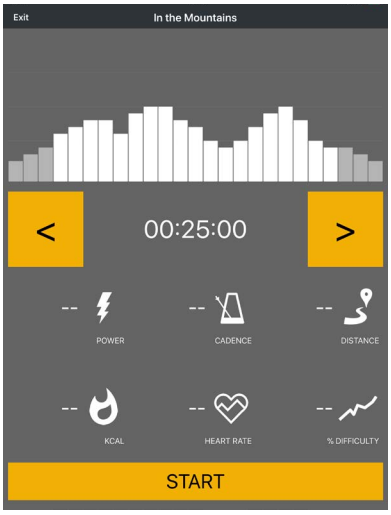

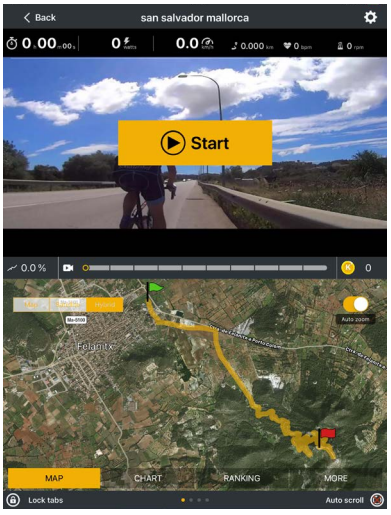

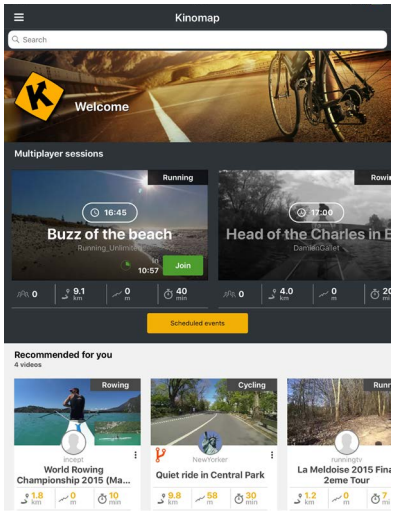

Example: Kinomap

5.1 General Instructions

⚠ **WARNING**

+ The storage location should be chosen so that improper use by third parties or children can be prevented.
+ If your equipment does not have transportation wheels, the equipment must be disassembled before transportation.

► **ATTENTION**

+ Make sure that the equipment is protected from moisture, dust and dirt in the selected storage location. The storage location should be dry and well ventilated and have a constant ambient temperature between 10°C and 35°C.

5.2 Transportation Wheels

► **ATTENTION**

If you want to transport your equipment over particularly sensitive and soft floor coverings, such as parquet, planks or laminate, lay out the transport route with cardboard or similar to avoid possible floor damage.

1. Stand behind the equipment and lift it until the weight is transferred to the transportation wheels. After that, you easily can move the equipment to a new position. For long transport distances the equipment should be disassembled and safely packed.
2. Select the new location by following the instructions in the section of this manual.

5.3 Folding Mechanism

⚠ **WARNING**

+ The treadmill is equipped with high-pressure shock absorbers that can cause the treadmill to suddenly open if handled incorrectly. For more information, refer to the section of this manual.
+ Do not lift the treadmill by the running mat or the rear transporting wheels. These parts do not lock and are difficult to grab.

ⓘ **NOTICE**

The treadmill is foldable and thus saves space when it is stored. It also makes it easier to transport.

5.3.1 Folding Up the Treadmill

⚠ **WARNING**

+ Do not connect the equipment to the power supply when it is folded up. Try not to operate the equipment when it is folded up.
+ The running surface must have come to a complete stop before folding.

⚠ **CAUTION**

+ Do not lean on the equipment when it is folded and do not place anything on top of it that may make the equipment unstable or fall down.

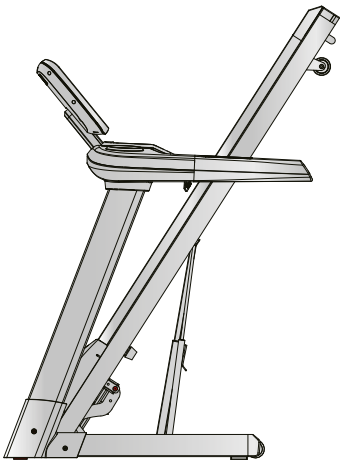

► **ATTENTION**

+ Make sure that nothing is standing next to or on top of the treadmill that can be spilled or thrown or that makes it impossible to fold the treadmill.

1. Turn off the on/off switch and remove the plug from the outlet.
2. Use both hands to grab the supportive bar directly under the rear part of the running mat so that you have a stable lifting point.
3. Make sure that the hydraulic brake is correctly locked and tilt the treadmill forward.
4. Make sure that you are standing safely and make sure that the locking mechanism is secure by pulling the equipment backwards and it does not move.

5.3.2 Unfolding the Treadmill

► **ATTENTION**

+ Make sure that nothing is standing next to or on top of the treadmill that can be spilled or thrown or that makes it impossible to unfold the treadmill.

1. Stand behind the treadmill and push the device slightly forward towards the display.
2. To release the hydraulic brake lock, use your left foot to push the upper part of the hydraulic brake slightly forward until the lock releases and the treadmill can be pulled back.
3. Keep holding the treadmill.

The hydraulic brake lowers itself gently downwards.

4. Once the treadmill has lowered ⅔, you can let go of the treadmill.

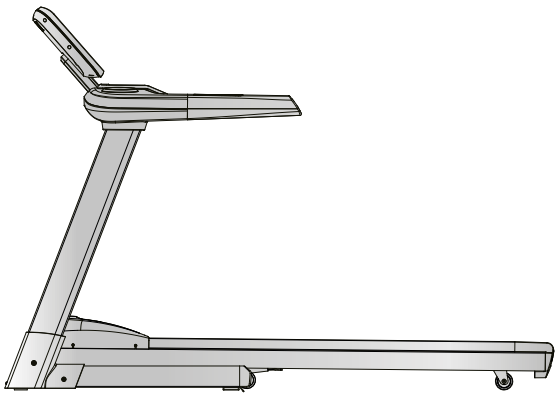

6.1 General Instructions

⚠ **WARNING**

+ Do not make any improper changes to the equipment.

⚠ **CAUTION**

+ Damaged or worn components may affect your safety and the life of the equipment. Therefore, immediately replace damaged or worn components. In such a case, contact the contract partner. The equipment must not be used until it has been repaired. If necessary, use only original spare parts.

► **ATTENTION**

+ In addition to the instructions and recommendations for maintenance and care given here, additional service and/or repair work may be necessary; this must only be carried out by authorised service technicians.

6.2 Faults and Fault Diagnosis

The equipment undergoes regular quality controls during production. Nevertheless, faults or malfunctions may occur. Frequently, individual parts are responsible for these disturbances, an exchange is usually sufficient. Please refer to the following overview for the most common errors and how to correct them. If the equipment still does not function properly, contact your contract partner.

Fault	Cause	Solution
Console is not responding	Safety key missing or not inserted correctly	Check whether Safety Key is inserted and insert if necessary
Running mat slanting Grinding noises	Running mat not centered	Adjust the running mat according to the instructions
Running mat slips through/stops	Tape tension/lubrication not correct	Check belt tension/lubrication according to instructions
Display is blank/is not working	+ Interrupted power connection + Loose cabel connections	+ Power switch to on + Check whether Safety Key is plugged in + Check cable connections
No pulse display	+ Sources of interference in the room + unsuitable chest strap + Wrong position of chest strap + Chest strap defective or battery empty + Pulse display defective	+ Eliminate sources of interference (e.g. mobile phone, WLAN, lawn mower and vacuum cleaner robot, etc. ...) + Use a suitable chest strap (see RECOMMENDED ACCESSORIES). + Reposition chest strap and/or moisten electrodes + Changing batteries + Check if pulse display by hand pulse possible

6.3 Error Codes and Troubleshooting

The electronics of the equipment continuously carries out tests. In case of deviations, an error code appears on the display and normal operation is stopped for your safety.

Please contact the contract partner for technical support.

6.4 Care and Maintenance

The most important maintenance measure is the care of the running mat. This includes adjustment, re tensioning and lubrication of the running mat. Damage resulting from insufficient or neglected care is not covered by the warranty. You should therefore carry out maintenance checks at regular intervals. Be very careful when adjusting and tightening the running mat, as a strong over voltage or under voltage can cause damage to the equipment. The running mat is adjusted at the factory according to the regulations before delivery. However, it may happen that the running mat slips during transport.

By scanning the QR-code with the camera function or QR-code scanner app of your smartphone/tablet, a video on general maintenance of a treadmill opens on YouTube. The video serves to illustrate the maintenance points described in this manual.

Please note that the video may not be available in your language or with appropriate subtitles.

If you cannot scan QR-codes, you can access all Fitshop videos on YouTube by first opening YouTube and entering "Fitshop" in the search field.

6.4.1 Adjusting the Running Mat

During training, the running mat should run as centrally and straight as possible. The alignment of the running mat can change depending on the stress and load. Another reason can be the positioning of the equipment on an uneven surface.

⚠ **CAUTION**
During the following maintenance nobody must be on the treadmill!

1. Let the treadmill run at a speed of 5 km/h.
2. If the running mat deviates to the left, turn the left adjusting screw at the rear end of the device max. one ¼ turn clockwise and the right adjusting screw max. one ¼ turn anticlockwise.
3. If the running mat deviates to the right, turn the right adjusting screw at the rear end of the device max. ¼ turn clockwise and the left adjusting screw max. ¼ turn anticlockwise.
4. Then observe the mat for about 30 seconds, as the change is not immediately visible.
5. Repeat this procedure until the running mat is straight again. If the running mat cannot be adjusted, please contact your contract partner.

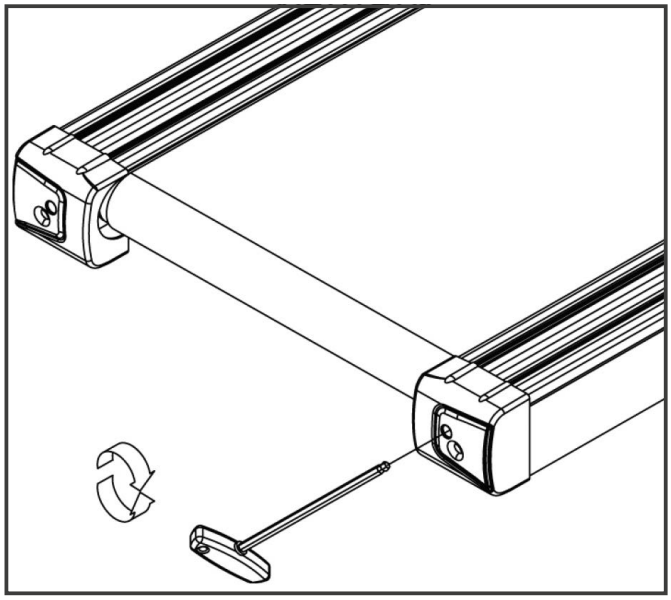

6.4.2 Re-tensioning the Running Mat

If the running mat slips over the rollers during operation (if this is the case, there is a noticeable jerk during running), the running mat must be re tightened.

In most cases, the slipping is caused by stretching of the mat through use. This is perfectly normal.

ⓘ **NOTICE**
Re-tensioning is carried out using the same adjusting screws that are used for adjustment.

1. Let the treadmill run at a speed of 5km/h.
2. Turn the left and right adjusting screws directly one after the other, max. one ¼ turn clockwise.
3. Then check whether the running mat continues to slip. If this is the case, you must perform the described procedure again.

6.4.3 Lubricating the Running Mat

If the running mat is not sufficiently lubricated, friction increases significantly and this leads to heavy wear of the endless belt, running plate, motor and circuit board. If you feel an increased friction of the running mat, this is an indication that you should lubricate the mat. However, lubrication should be carried out at least every 3 months or every 50 operating hours. Whichever case comes first.

ⓘ **NOTICE**
If your treadmill is equipped with a folding mechanism, you can also lubricate it when it is folded.

1. Raise the running mat slightly.
2. Apply some silicone oil or silicone spray to the entire deck and distribute evenly.
3. Continue turning the belt by hand so that the entire surface between the endless belt and the running plate is lubricated.
4. Wipe off the excess silicone oil or silicone spray.

ⓘ **NOTICE**
This maintenance must also be carried out after prolonged non-use of the equipment.

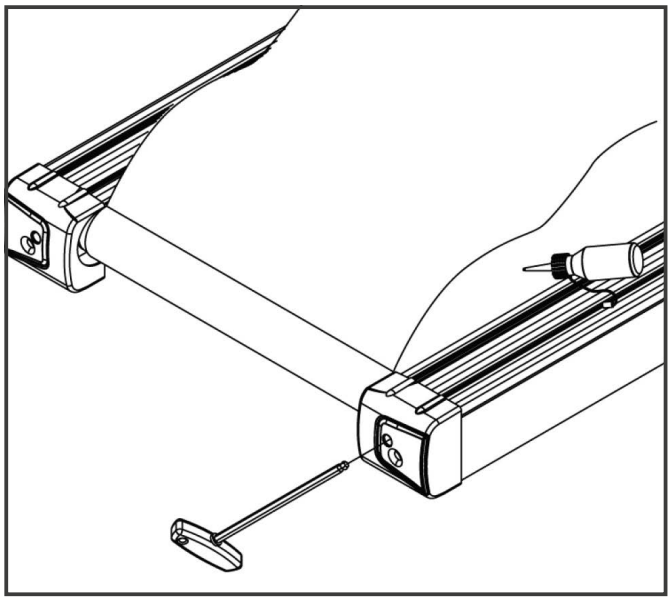

6.5 Maintenance and Inspection Calendar

To avoid damage from body sweat, the equipment must be cleaned with a damp towel (no solvents!) after each training session.

The following routine tasks must be performed at the specified intervals:

Part	Weekly	Monthly	Quarterly
Display console	C	I	
Tension of the running mat			I
Lubrication of the running mat			I
Plastic covers	C	I	
Screws and cable connections			I
Legend: C = clean; I = inspect			

By scanning the QR-code with the camera function or QR-code scanner app of your smartphone/tablet, a video on general maintenance of a treadmill opens on YouTube. The video serves to illustrate the maintenance points described in this manual.

Please note that the video may not be available in your language or with appropriate subtitles.

If you cannot scan QR-codes, you can access all Fitshop videos on YouTube by first opening YouTube and entering "Fitshop" in the search field.

7 DISPOSAL

At the end of its operational life, this equipment cannot be disposed of in normal household waste. Instead, it must be disposed of via an electricals recycling centre. Further information can be obtained from your local authority's recycling service.

The materials can be recycled as per their symbols. Through the reuse, recycling of materials or other forms of recovery of old equipment, you make an important contribution to the protection of the environment.

8 RECOMMENDED ACCESSORIES

To make your training experience even more efficient and pleasant, we recommend that you add suiting accessories to your fitness equipment. For elliptical cross trainers this could for example be a **floor mat**, which makes your fitness equipment stand more securely and also protects the floor from sweat or **silicone spray** to keep moving parts in good shape.

If you have purchased a fitness machine with pulse training and want to train your heart rate, we strongly recommend that you use a compatible **chest strap**, as this ensures optimum transmission of the heart rate.

Our range of accessories offers the highest quality and makes training even better. If you would like to find out more about compatible accessories, please go to the detail page of the product in our webshop (the easiest way is to enter the article number in the search field above) and go to the recommended accessories on this page. Of course, you can also contact our customer service: by telephone, e-mail, in one of our branches or via our social media channels. We will be happy to advise you!

chest strap

chest strap contact gel

floor mat

silicone spray

9.1 Serial Number and Model Name

In order to provide you with the best possible service, please have the model name, article number, serial number, exploded drawing and parts list ready. The corresponding contact options can be found in chapter 11 of this operating manual.

ⓘ **NOTICE**
The serial number of your equipment is unique. It's located on a white sticker. The exact position of this sticker is shown in the following illustration.

Enter the serial number in the appropriate field.

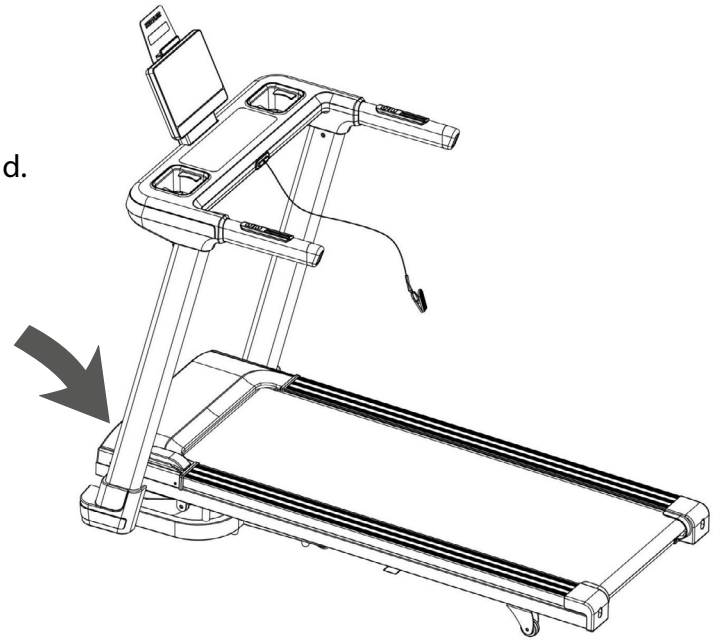

Serial number:

Brand / Category:

Kettler / treadmill

Model Name:

Alpha Run 100

Article Number:

K-TM2026-100

9.2 Parts List

No.	Supplier Parts No.	Name	Specification	Qty.
A01	3.83546B.100.001.000	Base frame		1
A02	3.11646B.300.001.000	Incline bracket		1
A03	3.83546B.200.001.000	Main frame		1
A04	3.83546B.320.001.000	Console bracket		1
A05	3.83546B.320.002.000	Console fixing bracket		1
A06	3.83546B.380.001.000	Left upright tube		1
A07	3.83546B.380.002.000	Right upright tube		1
A08	1.02.83546B.2022.000	Console board fixing bracket		1
B01	1.03.02.00.11646B.505	Front roller		1
B02	1.03.03.00.11646B.505	Back roller		1
B03	1.02.10946A.3827.000	Safety key spring plate		2
B04	1.03.05.00.000042.000	Incline drive pipe		8
B05	1.03.13.05.000001.505	Wrench w/screw driver		1
B06	1.03.13.04.000001.505	5# Allen wrench		1
B07	1.03.99.00.000251.000	Hand pulse plate		4
B08	1.03.01.00.83546B.509	Cylinder		1
B09	1.02.82246B.4021.505	Brushless motor pressing board		1
C01	1.05.03.01.11646B.000	Motor top cover		1
C02	1.05.03.02.11646B.000	Motor bottom cover		1
C03	1.05.04.01.000024.000	Left rear cover		1
C04	1.05.04.02.000021.000	Right rear cover		1
C05	1.05.06.00.000145.000	Side rail		2
C06	1.05.02.02.83546B.000	Console top cover		1
C07	1.05.02.03.83546B.000	Console bottom cover		1
C08	1.05.02.09.83546B.000	Console support top cover		1
C09	1.05.02.10.83546B.000	Console support bottom cover		1
C10	1.05.99.00.001502.000	Water bottle clamp block		4
C11	1.05.99.00.001503.000	Incline hand pulse cover		1
C12	1.05.99.00.001504.000	Speed hand pulse cover		1
C13	1.05.01.13.000068.000	Left upright tube cover		1
C14	1.05.01.13.000069.000	Right upright tube cover		1

C15	1.05.01.05.60302Q.401	Handle foam		2
C16	1.05.99.00.001505.401	Water bottle EVA		2
C17	1.05.05.00.83546B.401	Running belt		1
C18	"1.05.99.00.000580.403 1.05.99.00.000600.403"	Safety key		1
C19	1.05.01.06.000020.401	Black cushion		8
C20	1.05.01.03.000001.401	Ring shape protective plug		2
C21	1.05.01.06.000056.000	Cylindrical cushion		2
C22	1.05.99.00.000787.401	EVA pad		3
C23	1.05.01.02.000001.401	End cap		2
C24	1.05.01.10.000001.401	Transport wheel		2
C25	1.05.01.10.000002.000	Adjustable wheel		2
C26	1.05.01.12.000005.401	Foot pad		4
C27	1.05.07.00.J39062.401	Motor belt		1
C28	1.05.99.00.000919.401A	button		1
C29	1.05.99.00.000919.401B	button		1
C30	1.05.99.00.000919.401C	button		2
C31	1.05.99.00.001291.000	Motor top cover fixing base		7
C32	1.05.01.02.000021.401	Square plug		2
C33	1.05.99.00.000002.401	Plastic gasket		2
D01	1.04.01.03.060000.512	Nut	M6	8
D02	1.04.01.03.080000.512	Nut	M8	6
D03	1.04.01.03.100000.512	Nut	M10	10
D04	1.04.02.01.109564.512	Bolt	M10*95	1
D05	1.04.02.01.105503.512	Bolt	M10*55	4
D06	1.04.02.01.085503.512	Bolt	M8*55	2
D07	1.04.02.03.085500.512	Bolt	M8*55	4
D08	1.04.02.01.084003.512	Bolt	M8*40	2
D09	1.04.02.01.083562.512A	Bolt	M8*35	2
D10	1.04.02.01.083002.512	Bolt	M8*30	1
D11	1.04.02.01.081500.512	Bolt	M8*15	6
D12	1.04.02.01.104562.512	Bolt	M10*45	1
D13	1.04.02.02.066500.512	Bolt	M6*65	2
D14	1.04.02.02.065500.512	Bolt	M6*55	1

D15	1.04.02.03.063500.512	Bolt	M6*35	8
D16	1.04.02.02.061500.512	Bolt	M6*15	4
D17	1.04.02.04.051600.512	Bolt	M5*16	4
D18	1.04.02.04.051000.512	Bolt	M5*10	2
D20	1.04.02.07.4A3000.512	Screw	ST4.2*30	4
D21	1.04.02.05.4A2000.512	Bolt	M5*16	4
D22	1.04.02.05.4A1200.512	Screw	ST4.2*12	42
D23	1.04.02.05.4A1290.512	Screw	ST4.2*12	6
D24	1.04.02.06.4A1290.512	Screw	ST4.2*12	4
D25	1.04.02.05.4A0800.512	Screw	ST4.2*8	8
D26	1.04.02.05.2A0800.512	Screw	ST2.9*8	16
D27	1.04.02.05.2B0690.502	Screw	ST2.5*6	4
D28	1.04.03.04.102620.502	Big washer	φ10*φ26*2.0	2
D29	1.04.03.01.100000.512	Locked washer	10	6
D30	1.04.03.01.080000.512	Locked washer	8	10
D31	1.04.03.05.080000.512	Arc-shaped gasket	Φ8	2
D32	1.04.03.01.060000.512	Locked washer	6	3
D33	1.04.03.03.060000.512	Flat washer	6	4
D34	1.04.03.02.060000.512	Spring washer	6	4
D35	1.04.02.04.050890.502	Bolt	M5*8	2
D36	1.04.03.01.050000.502	Locked washer	5	2
D37	1.04.03.02.050000.502	Spring washer	5	2
D38	1.04.02.01.084503.512	Bolt	M8*45	1
D39	1.04.02.02.109564.512	Bolt	M10*95	2
D40	1.04.02.06.4A2500.512	Screw	ST4.2*25	7
D41	1.04.02.27.4A1300.512	Screw	ST4.2*13	4
D42	1.04.02.05.4A1900.512	Screw	ST4.2*19	2
E01	1.05.99.00.83546B.000	Running board		1
E02	1.06.01.01.000024.401	Square switch button		1
E03	1.06.99.04.000001.010	Overload protector		1
E04	1.06.99.99.000001.000	Power socket		1
E05	1.06.99.01.000001.401	Magnet core		1
E06	1.06.05.01.3B0500.001	Power wire		1
E07	1.06.05.02.120020.402	AC single wire		1

E08	1.06.05.02.135020.402	AC single wire		2
E09	1.06.05.02.135020.406	AC single wire		2
E10	1.06.05.04.135050.413	Grounding wire		1
E11	1.06.99.02.000020.401	Magnet ring 3		1
E12	1.06.06.03.170600.000	Incline motor		1
E13	1.06.02.01.83546B.000	Console		1
E14	1.06.03.01.83546B.000	Control board		1
E15	1.06.04.01.6A0030.000	Console top signal wire		1
E16	1.06.04.02.6A0030.000	Console middle signal wire		1
E17	1.06.04.03.630030.000	Console bottom signal wire		1
E18	1.06.04.99.2A1000.000	Hand pulsewire		2
E19	1.06.08.99.000172.000	Incline button board		1
E20	1.06.08.99.000173.000	Speed button board		1
E22	1.06.04.99.650030.000	Button connecting wire		1
E23	1.06.08.02.000049.000	Button board		1
E24	1.06.05.04.150020.000	Control board grounding wire		1
E25	1.06.06.06.450000.000	motor		1
F01	1.06.99.08.000012.006	Filter		1
F02	1.06.99.07.000007.006	Inductance		1
F03	1.06.05.02.135020.406	AC single wire		1
F04	1.06.05.04.135050.413	Grounding wire		1
F05	1.04.02.05.4A1000.512	Screw	ST4.2*12	1

9.3 Exploded Drawing

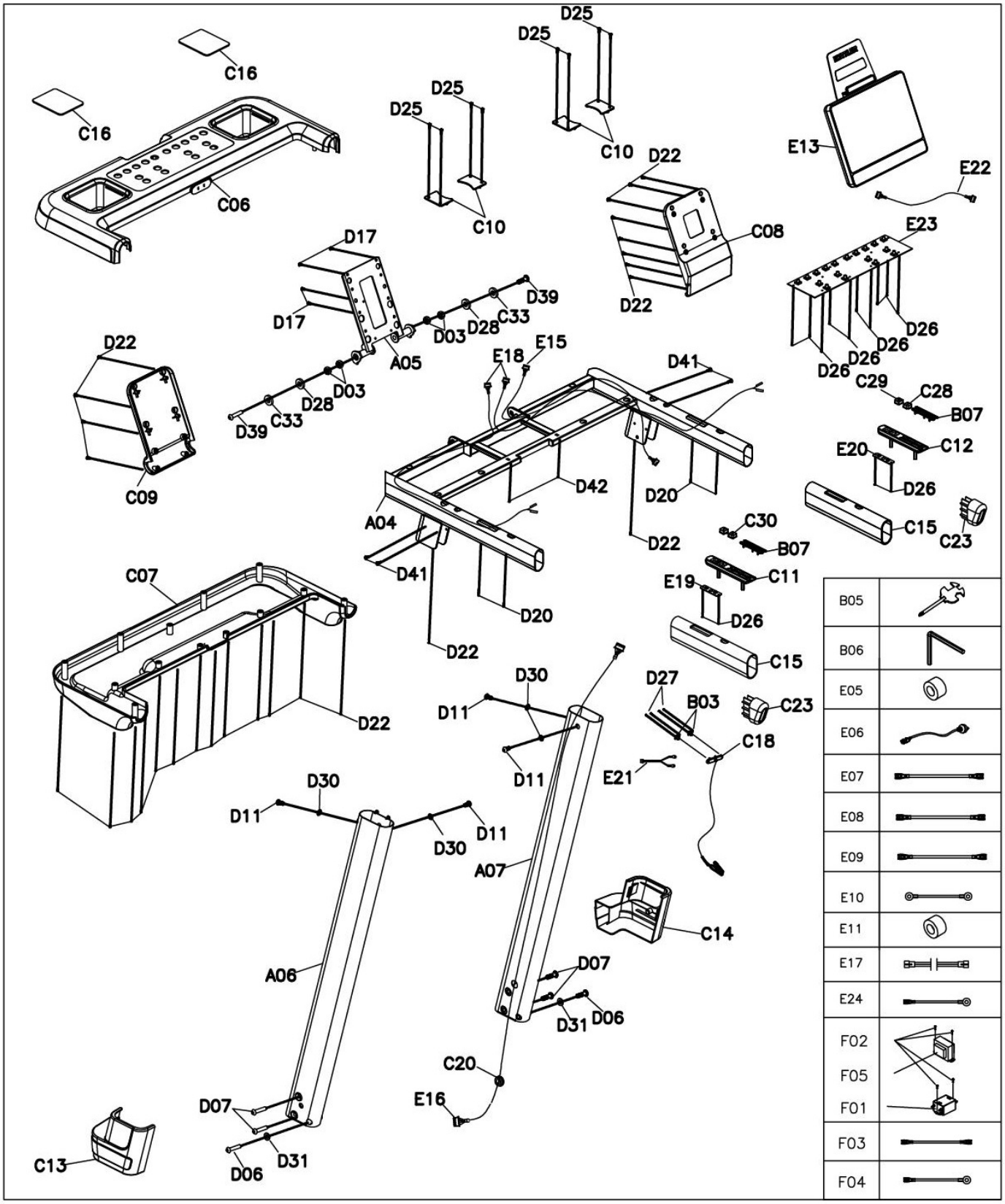

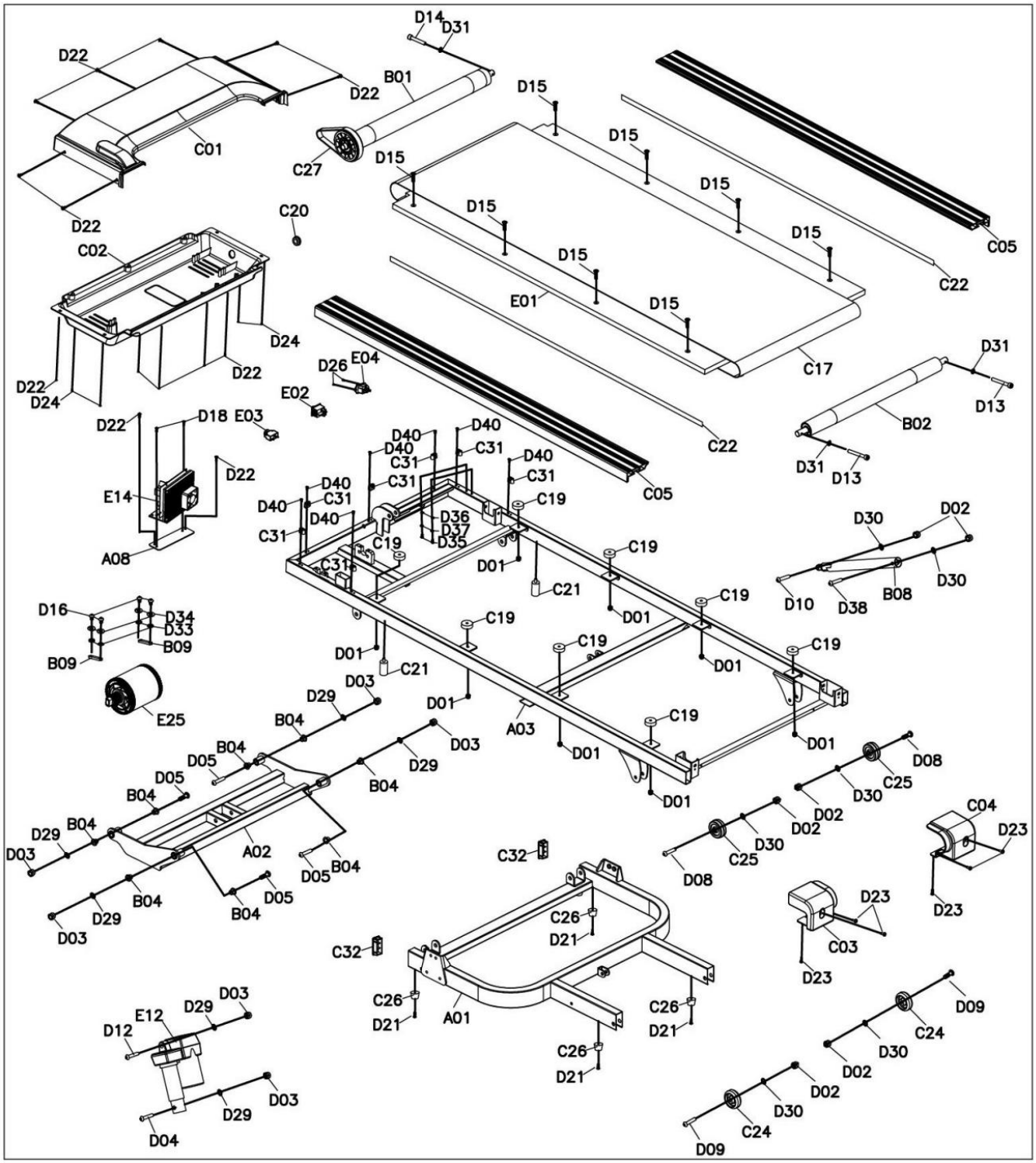
D14
D31
D22
B01
D22
D15
C01
C27
D15
D15
D15
D15
D15
D15
D15
C20
D22
C02
C05
C22
E01
D15
D24
D31
D26
E04
C17
D22
D22
D24
E02
D13
B02
D22
D18
E03
D40
D40
D40
C31
C31
D40
C31
C31
D31
D13
D22
C31
C19
C05
E14
D40
D40
D36
D37
D35
D30
D02
C31
C19
C19
A08
C31
D01
C21
D30
D10
D38
B08
D16
D34
D33
B09
C19
D01
C19
C19
B09
D01
C21
D01
C19
D03
D29
D01
E25
B04
A03
C19
D01
D03
B04
D05
D29
D01
D08
D05
B04
C25
D30
B04
D01
D02
C04
D29
B04
D02
D23
D03
A02
D30
C32
C25
D05
B04
D08
D23
B04
D05
D23
D29
B04
C26
D21
C03
D03
C32
D23
C26
D09
E12
D29
D03
D21
A01
C26
D21
C24
D12
C26
D30
D21
D02
D03
D02
D29
D30
C24
D04
D09

10 WARRANTY

Products from Kettler® are subject to strict quality control. However, if a fitness equipment purchased from us does not work perfectly, we take it very seriously and ask you to contact our customer service as indicated. We are happy to help you by phone via our service hotline.

Error Descriptions
Your fitness equipment is developed for long-term, high-quality training. However, should a problem arise, please first read the operating instructions. For further assistance, please contact your contract partner or call our service hotline. To ensure your problem is solved as quickly as possible, please describe the defect as exactly as possible.

In addition to the statutory warranty, we provide a warranty for every fitness equipment purchased from us according to the following provisions.

Your statutory rights are not affected.

Warrantee
The warrantee is the first/original buyer and/or any person who received a newly purchased product as a gift from the original buyer.

Warranty period
The warranty periods, shown on our web shop, begin on delivery of the fitness equipment. The respective warranty periods for your equipment can be found on its product website.

Repair Costs
According to our choice, there will either be a repair, a replacement of individual damaged parts or a complete replacement. Spare parts, that have to be mounted while assembling the equipment, have to be replaced by the warrantee personally and are not a part of repair. After the expiration of the warranty period, the responsibility for parts costs, repair costs, installation costs and delivery costs lies with the warranty holder.

The terms of use are defined as follows:

- Home use: solely for private use in private households up to 3 hours per day
- Semi-professional use: up to 6 hours per day (e. g. rehabilitation centres, hotels, clubs, company gyms)
- Professional use: more than 6 hours per day (e. g. commercial gyms)

Warranty Service
Within the warranty period, equipment which develops faults as a result of material or manufacturing defects, will be repaired or replaced at our discretion. Ownership of equipment or parts of equipment which have been replaced is transferred to us. The warranty period is not extended nor does a new warranty period begin following repair or replacement under the warranty.

Warranty Conditions
For the warranty to be valid, the following steps must be taken:

Please contact our customer service by email or phone. If the product under warranty has to be sent in for repair, the seller bears costs. After expiry of the warranty, the buyer bears the costs of transport and insurance. If the fault is covered by our warranty, you will receive a new or repaired equipment in return.

Warranty claims are invalid in case of damage resulting from:

+ misuse or improper handling
+ environmental influences (moisture, heat, electrical surge, dust, etc.)
+ failure to follow the current safety measures for the equipment
+ failure to follow the operating instructions
+ use of force (e. g. hitting, kicking, falling)
+ interventions which were not carried out by one of our authorized service centres
+ unauthorised repair attempts

Proof of Purchase and Serial Number
Please make sure that you are able to provide the appropriate receipt when claiming on your warranty. So that we can clearly identify the model of your equipment, and for the purposes of our quality control, you will need to give the serial number of your equipment, when contacting the service team. Where possible please have your serial number and your customer number ready when you call our service hotline. It will help us to deal with your request swiftly.

If you cannot find the serial number on your fitness equipment, our service team is at your disposal to offer further information.

Service outside of the Warranty Period
We are also happy to issue an individual cost estimate if there is a problem with your fitness equipment after the warranty has expired, or in cases which do not fall under the terms of the warranty, e. g. normal wear and tear. Please contact our customer service team to find a quick and cost-effective solution to your problem. In such a case you will be responsible for the delivery costs.

Communication
Many problems can be solved just by speaking to us as your specialist supplier. We know how important it is to you as a user of the fitness equipment to have problems solved quickly and simply, so you can enjoy working out with minimal interruption. For that reason, we also want to resolve your queries quickly and in a straightforward manner. Thus, please always keep your customer number and the serial number of the faulty equipment handy.

11 CONTACT

DE

TECHNIK

+49 4621 4210-900
+49 4621 4210-698
technik@fitshop.de
Öffnungszeiten entnehmen Sie unserer Homepage.

SERVICE

0800 20 20277 (kostenlos)
04621 4210 - 0
info@fitshop.de
Öffnungszeiten entnehmen Sie unserer Homepage: https://stg.fit/statita

DK

TEKNIK OG SERVICE

80 90 16 50
+49 4621 4210-945
info@fitshop.dk
Åbningstider kan findes på hjemmesiden: https://stg.fit/statit7

EN

CUSTOMER SUPPORT

00800 2020 2772
+494621 4210 944
service@fitshop.com
You can find the opening hours on our homepage: https://fsg.fit/en

FR

TECHNIQUE & SERVICE

+33 (0) 189 530984
+49 4621 42 10 933
info@fitshop.fr
Vous trouverez les heures d'ouverture sur notre site Internet: https://stg.fit/statit4

BE

TECHNIQUE & SERVICE

02 732 46 77
+49 4621 4210 933
info@fitshop.be
Vous trouverez les heures d'ouverture sur notre site Internet: https://stg.fit/statit8

ES

TECNOLOGÍA Y SERVICIOS

911 238 029
info@fitshop.es
Consulta nuestro horario de apertura en la página web: https://stg.fit/statit5

NL

TECHNISCHE DIENST & SERVICE

+31 172 619961
service@fitshop.nl
De openingstijden vindt u op onze homepage: https://stg.fit/statit3

INT

TECHNICAL SUPPORT & SERVICE

+49 4621 4210-944
service-int@fitshop.de
You can find the opening hours on our homepage: https://stg.fit/statita

PL

DZIAŁ TECHNICZNY I SERWIS

22 307 43 21
+49 4621 42 10-948
info@fitshop.pl
Godziny otwarcia można znaleźć na stronie głównej: https://stg.fit/statit6

AT

TECHNIK & SERVICE

0800 20 20277 (Freecall)
+49 4621 42 10-0
info@fitshop.at
Öffnungszeiten entnehmen Sie unserer Homepage: https://stg.fit/statitb

CH

TECHNIK & SERVICE

0800 202 027
+49 4621 42 10-0
info@fitshop.ch
Öffnungszeiten entnehmen Sie unserer Homepage: https://stg.fit/statit9

Please find a detailed overview including address and opening hours for all stores of the Fitshop Group in Germany and abroad on the following website:

www.fitshop.com/en/stores

KETTLER

WEBSHOP AND SOCIAL MEDIA

Since 2024 Kettler sports equipment is part of the Fitshop brand family, Europe's largest specialist retailer for home fitness equipment. Kettler equipment such as treadmills, cross trainers, and rowing machines have always played an important role in Fitshop's more than 40-year history. Kettler stands for the highest product quality, reliability, and tradition. Kettler sports equipment helps you lead an active and healthy life. They make exercise fun for young and old. As part of the Fitshop Group, Kettler Sport remains true to these values.

Visit us also on our social media platforms or our online shop!

FIT SHOP	www.fitshop.com/kettler www.kettlersport.com
	www.facebook.com/fitshopgroup/
	www.instagram.com/fitshopgroup/
	www.linkedin.com/company/fitshop-gmbh
	www.stg.fit/YouTube_DE

Kettler is part of the Fitshop Group.

Notes

Notes

KETTLER

ALPHA RUN 100