KETTLER

ASSEMBLY AND OPERATING INSTRUCTIONS

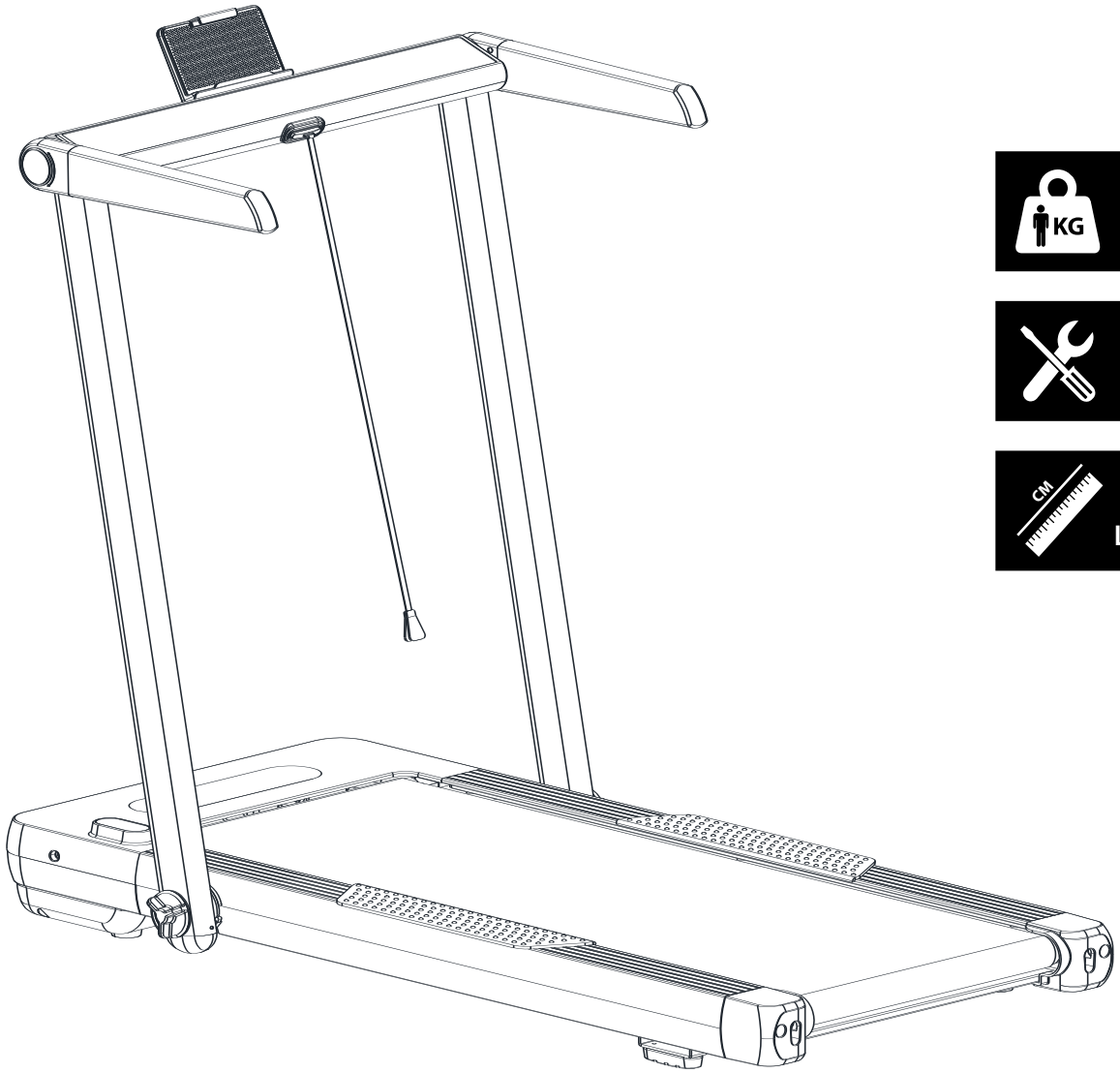

max. 110 kg

~ 60 Min.

36 kg

L 141 | W 74 | H 111

KTM2021100.01.02

Art. No. K-TM2021-100

ALPHA WALK 400

Content

1	GENERAL INFORMATION	8
1.1	Technical Data	8
1.2	Personal Safety	9
1.3	Electrical Safety	10
1.4	Set-Up Place	11
2	ASSEMBLY	12
2.1	General Instructions	12
2.2	Scope of Delivery	13
2.3	Assembly	14
2.3.1	Walking Mode	17
2.4	Battery Replacement	19
3	OPERATING INSTRUCTIONS	20
3.1	Console Display	20
3.2	Button Functions	21
3.3	Running Mode	21
3.3.1	Target Programmes	21
3.3.2	Pre-Set Programmes	22
3.3.3	User Programmes	23
3.4	Function: Remote	24
3.4.1	Walking Mode	24
3.4.2	Remote Control	24
3.4.3	Remote Control Pairing	24
4	WORKOUT TIPS	25
4.1	General Instructions	25
4.1.1	Training clothes	25
4.1.2	Warming up and stretching	25
4.1.3	Medication	26
4.1.4	Used muscle groups	26
4.1.5	Exercise frequency	26
4.2	Workout journal	28
5	STORAGE AND TRANSPORT	29
5.1	General Instructions	29
5.2	Transportation Wheels	29

6 TROUBLESHOOTING, CARE AND MAINTENANCE 30

6.1 General Instructions 30
6.2 Faults and Fault Diagnosis 30
6.3 Error Codes and Troubleshooting 31
6.4 Care and Maintenance 32
6.4.1 Adjusting the Running Mat 32
6.4.2 Re-tensioning the Running Mat 33
6.4.3 Lubricating the Running Mat 33
6.5 Maintenance and Inspection Calendar 34

7 DISPOSAL 34

8 RECOMMENDED ACCESSORIES 35

9 ORDERING SPARE PARTS 36

9.1 Serial Number and Model Name 36
9.2 Parts List 37
9.3 Exploded Drawing 40

10 WARRANTY 41

11 CONTACT 43

Dear customer,
Thank you for choosing a Kettler fitness device. Kettler Sport represents tradition, durability, and quality like no other home fitness brand. Classic home trainers such as the Golf have accompanied users for decades. At the same time, Kettler stands for innovation and continuously develops thoughtful solutions, particularly in usability and training comfort.

Kettler Sport provides everything you need for successful training at home: cardio and strength equipment, as well as a wide range of fitness accessories.

Further information can be found at www.fitshop.com/kettler.

Intended Use

The equipment may only be used for its intended purpose.

The equipment is only suitable for home use. The equipment is not suitable for semi-professional (e.g. hospitals, associations, hotels, schools, etc.) and commercial or professional use (e.g. fitness studios).

Legal Notice

Fitshop GmbH
Europe's No. 1 for home fitness

International Headquarters
Flensburger Straße 55
24837 Schleswig
Germany

Management:
Christian Grau
Sebastian Campmann
Dr. Bernhard Schenkel

No. HRB 1000 SL
Local Court Flensburg
European VAT Number: DE813211547

Disclaimer

Since December 19, 2024, the trademark rights to © Kettler for fitness equipment in the EU, EFTA, and Turkey are held by Fitshop GmbH. All rights reserved. Any use of this trademark without the explicit written permission of Fitshop is prohibited.

Product and manual are subject to change. Technical data can be changed without advance notice.

FITSHOP
Europe's No.1 for Home Fitness

ABOUT THIS MANUAL

Please carefully read the entire manual before installation and first use. The manual will help you to quickly set up the system and explains how to safely use it. Make sure that all persons exercising with the equipment (especially children and persons with physical, sensory, mental or motor disabilities) are informed about this manual and its contents in advance. In case of doubt, responsible persons must supervise the use of the equipment.

Due to ongoing changes and software optimisations, the manual may have to be updated. If you notice any discrepancies during assembly or use, please refer to the manual uploaded to the webshop. The latest manual is always available there.

This equipment has been manufactured according to the latest safety knowledge. As far as possible, potential safety hazards which could cause injury have been eliminated. Make sure to carefully follow the instructions and that all parts are securely in place. If required, read through the instructions again to correct any mistakes.

Training devices must be classified according to accuracy and use. Accuracy classes are only applicable to devices that display training data.

Accuracy classes

Class A: high accuracy.
Class B: medium accuracy.
Class C: low accuracy.

The use classes explain the intended use of the training device.

Use classes

Class S (studio): professional and/or commercial use.
These training devices are intended for the use in training rooms of facilities such as sports clubs, school facilities, hotels, clubs and studios whose access and supervision is specifically regulated by the owner (person with legal responsibility).

Class H (home use): use at home.
These stationary training devices are intended for the use in private homes where access to the training device is regulated by the owner (person with legal responsibility).

Please pay close attention to the safety and maintenance instructions given here. The contract partner cannot be held liable for damage to health, accidents or damage to the equipment when it is not used in accordance with these instructions.

The following safety instructions may appear in this manual:

► **ATTENTION**
This notice indicates potentially hazardous situations which, if not avoided, may result in property damage.

⚠ **CAUTION**
This notice indicates potentially hazardous situations which, if not avoided, may result in slight or minor injuries!

⚠ **WARNING**
This notice indicates potentially hazardous situations which, if not avoided, may result in death or serious injuries!

⚠ **DANGER**
This notice indicates potentially hazardous situations which, if not avoided, will result in death or serious injuries!

ⓘ **NOTICE**
This notice indicates further useful information.

Retain these instructions in a safe place for future reference, maintenance or when ordering replacement parts.

1.1 Technical Data

LED - Display of

+ Speed in km/h
+ Training time in min
+ Training distance in km
+ Calories in kcal
+ Steps

Speed range:	1 - 12 km/h (adjustable in steps of 0.1 km/h)
Programmes in total:	18
Pre-set programmes:	15
User-defined programmes:	3
Size of running surface (L x W):	120 x 42 cm

Weight and dimensons:

Article weight (gross, including packaging):	42 kg
Article weight (net, without packaging):	36 kg
Packaging dimensions (L x W x H):	157.6 cm x 77.5 cm x 16.1 cm
Set-up dimensions (L x W x H):	141 cm x 74 cm x 111 cm
Folding dimensions (L x B x H):	149 cm x 74 cm x 15 cm
Maximum user weight:	110 kg
Use class:	H

1.2 Personal Safety

⚠ **DANGER**

+ Before you start using the equipment, you should consult your physician that this type of exercise is suitable for you from a health perspective. Particularly affected are persons who: have a hereditary disposition to high blood pressure or heart disease, are over the age of 45, smoke, have high cholesterol values, are overweight and/or have not exercised regularly in the past year. If you are under medical treatment that affects your heart rate, medical advice is absolutely essential.
+ Note that excessive training can seriously endanger your health. Please also note that heart rate monitoring systems can be inaccurate. If you notice any signs of weakness, nausea, dizziness, pain, shortness of breath, or other abnormal symptoms, stop exercising immediately and seek advice from your doctor if necessary.
+ The owner must communicate all warnings and instructions to the user.

⚠ **WARNING**

+ This equipment may not be used by children under the age of 14.
+ Children should not be allowed unsupervised access to the equipment.
+ Persons with disabilities must have a medical license and must be under strict observation when using the equipment.
+ The equipment is strictly for use by one person at a time.
+ If your equipment provides a safety key, the clip of the safety key must be attached to your clothing before starting your training. In the event of a fall, the EMERGENCY STOP of the equipment can be initiated.
+ If an emergency occurs and training has to be stopped abruptly, pull out the safety key, grab both handles, jump onto the side rails and wait until the treadmill has come to a complete stop.
+ Keep your hands, feet and other body parts, hair, clothing, jewellery and other objects well clear of moving parts.
+ During use, wear suitable sports clothing rather than loose or baggy clothing. When wearing sports shoes, make sure they have suitable soles, preferably made of rubber or other non-slip materials. Shoes with heels, leather soles, studs or spikes are unsuitable. Never exercise barefoot.

⚠ **CAUTION**

+ If your equipment needs to be connected to the power supply with a mains cable, make sure that the cable is not a potential tripping hazard.
+ Make sure that nobody is within the range of motion of the equipment during training so as not to endanger you or other persons.
+ Be aware that if adjustment devices are left protruding, they may impede the user's movement.
+ The safety level of the appliance can only be maintained if it is regularly checked for damage and wear.

► **ATTENTION**

+ Do not insert any objects of any kind into the openings of the device.
+ To protect the equipment from use by unauthorised third parties, always remove the power cable (if existing) when not in use and store it in a safe place that is inaccessible to unauthorised persons (e.g. children).

1.3 Electrical Safety

⚠ **DANGER**

+ In order to reduce the risk of an electric shock, always unplug the equipment from the mains socket immediately after your workout, before assembly or dismantling, and before maintenance or cleaning. Do not pull on the cable.

⚠ **WARNING**

+ Do not leave the equipment unattended while the mains cable is plugged into the mains socket. During your absence, the mains cable must be removed from the mains socket to prevent improper use by third parties or children.
+ If the mains cable or plug is damaged or defective, contact your contract partner. Until repair, the equipment must not be used.

► **ATTENTION**

+ The equipment requires a mains connection of 220-230 V with 50 Hz mains voltage.
+ The equipment may only be connected directly to an earthed socket using the supplied mains cable. Extension cables must conform to VDE guidelines. Always completely unwind the mains cable.
+ The socket must be protected by a fuse with a minimum fuse rating of "16 A, slow blow".
+ Do not make any changes to the mains cable or the mains plug.
+ Keep the mains cable away from water, heat, oil and sharp edges. Do not route the mains cable underneath the equipment or under a carpet or rug, and do not place any objects on top of it.
+ If your purchased item is equipped with a TFT console, software updates must be carried out regularly. Follow the instructions on the console to perform the update(s).
+ The software systems on gym equipment with TFT consoles are set up only for the pre-installed apps. Do not install any additional apps.

ⓘ **NOTICE**

+ The pre-installed apps on TFT consoles are produced and provided by external manufacturers. Fitshop does not take any responsibility for the availability, functionality or contents of these apps.
+ Hereby, Fitshop GmbH declares that the radio equipment type Wireless Connection (2.402 – 2.480 GHz) complies with Directive 2014/53/EU. The full text of the EU Declaration of Conformity is available at the following website: www.fitshop.com.

1.4 Set-Up Place

⚠ **WARNING**

+ Do not place the equipment in main corridors or escape routes.

⚠ **CAUTION**

+ Make sure that there is a safety area behind the treadmill with a length of at least 2 m and a width at least equal to the width of the treadmill.
+ The training room should be well ventilated during training and not be exposed to any draughts.
+ Choose the place in which to set up the equipment such that there is enough free space/ clearance to the front, the rear and to the sides of the equipment.
+ The free area in the direction from which the exercise equipment is accessed must be at least 0.6 m larger than the exercise area.
+ The set-up and mounting surface of the equipment should be flat, loadable and solid.

► **ATTENTION**

+ The device may only be used in one building, in sufficiently tempered and dry rooms (ambient temperatures between 10°C and 35°C). The equipment should not be used outdoors or in rooms with high humidity (over 70%) like swimming pools.
+ A floor protective mat/equipment underlay can help to protect high-quality floor coverings (parquet, laminate, cork, carpets) from dents and sweat and can help to level out slight unevenness.
+ For Class S equipment, the exercise equipment may only be used in areas where access, supervision and control are specifically regulated by the owner.

Recommended free zone:

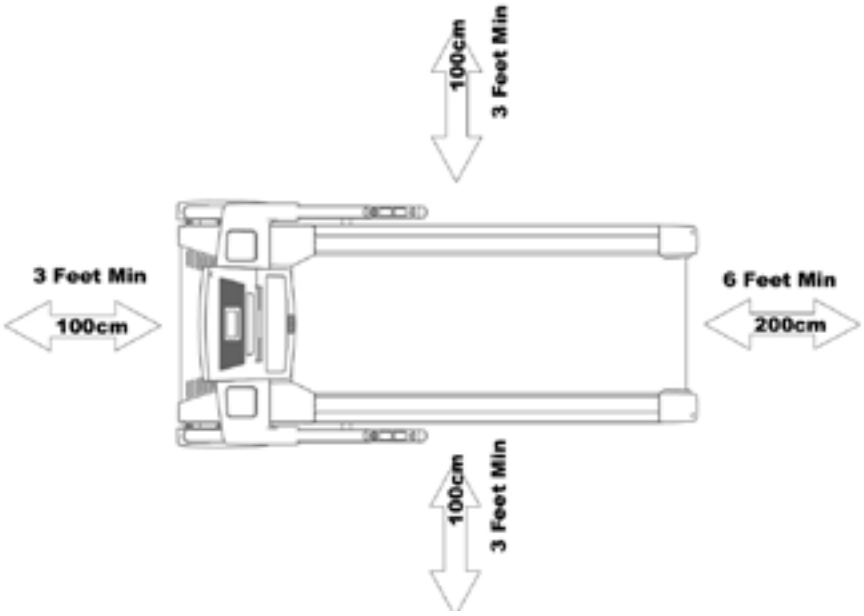

2.1 General Instructions

⚠ **DANGER**

+ Do not leave any tools, packaging materials such as foils or small parts lying around, as otherwise there is a danger of suffocation for children. Keep children away from the equipment during assembly.

⚠ **WARNING**

+ Pay attention to the instructions attached to the equipment in order to reduce the risk of injuries.

⚠ **CAUTION**

+ Ensure to have sufficient room for movement in each direction during assembly.
+ The assembly of the equipment must be carried out by at least two adults. If in doubt, seek the help of a third technically skilled person.

► **ATTENTION**

+ To prevent damage to the equipment and the floor, assemble the equipment on a mat or packaging board.

ⓘ **NOTICE**

+ In order to make the assembly as simple as possible, some screws and nuts to be used can already be pre-assembled.
+ Ideally, assemble the equipment at its later set-up place.

2.2 Scope of Delivery

The scope of delivery consist of the following parts. At the beginning, check whether all parts and tools belonging to the device are included in the scope of delivery and whether damage has occurred. In the event of complaints, the contractual partner must be contacted directly.

⚠ **CAUTION**
If parts of the scope of delivery are missing or damaged, the assembly must not be carried out.

ⓘ **NOTICE**
The following batteries are required: 1 x CR2032 (not included in the scope of delivery)

ⓘ **NOTICE**
Required tools: hexagon wrench

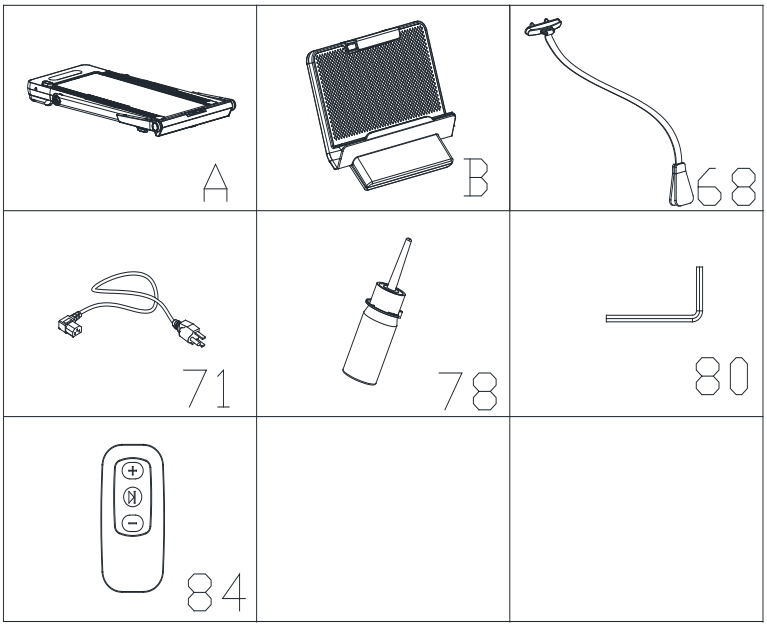

Spare parts list:

No.	Name	Spec.	Qty	No.	Name	Spec.	Qty
A	Treadmill		1	78	Silicone oil		1
B	Tablet holder		1	80	Hexagon wrench	6#	1
68	Safety Key		1	84	Remote control		1
71	Power cord		1				

2.3 Assembly

Before assembly, take a close look at the individual assembly steps shown and carry out the assembly in the order given.

ⓘ **NOTICE**

+ First loosely screw all parts together and check that they fit properly. Tighten the screws using the tool only when you are instructed to do so.
+ Do not tighten the screws and bolts with excessive force as they could be damaged.
+ If you have difficulty recognising the graphics, we recommend that you open and/or download the PDF instructions stored in the webshop on your end device (e.g. smartphone, tablet or PC). There you have the option of zooming in closer. Please note that the Adobe Acrobat Reader programme must be installed on your end device in order to open the file.

Step 1: Unboxing

1. Lift the treadmill and the corresponding parts out of the box.
2. Place the main frame on the ground and cut off the package tape.

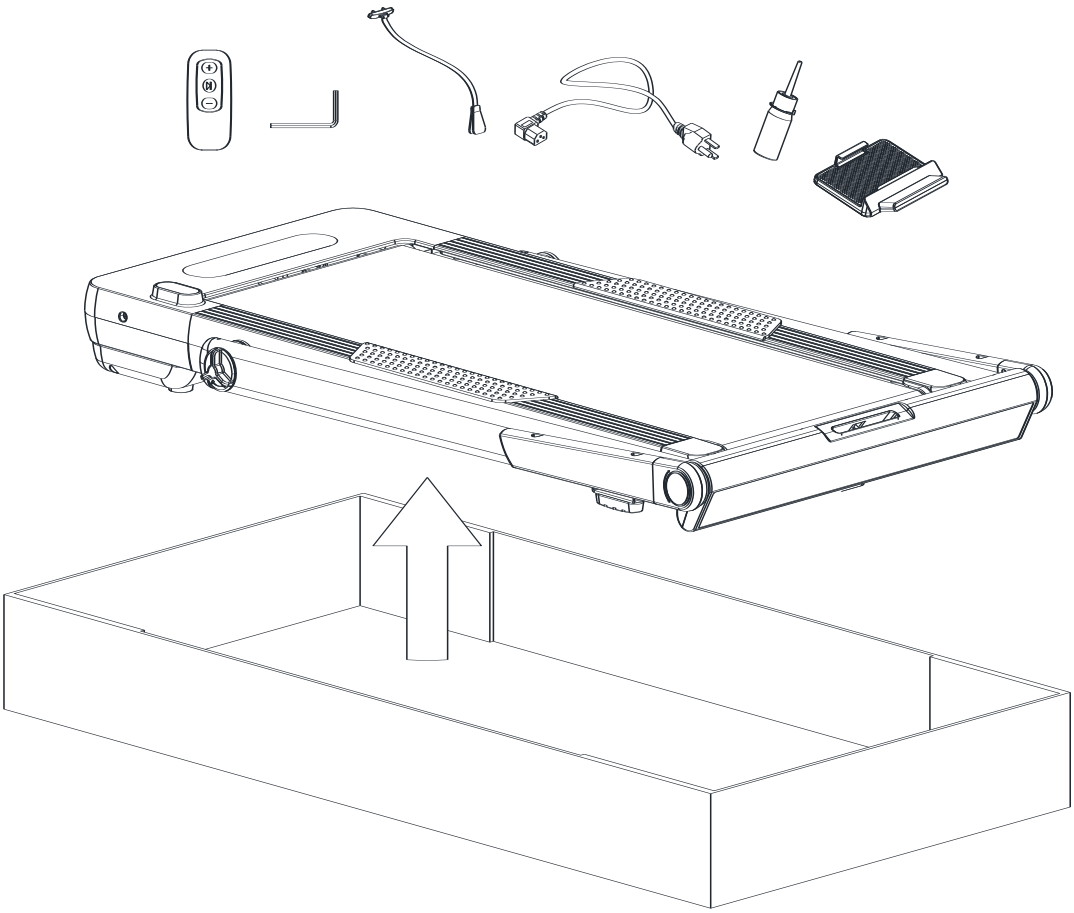

Step 2: Folding the Uprights Upwards

1. Loosen the left knob (57) by turning it counterclockwise.
2. Loosen the right knob (57) by turning it clockwise.

ⓘ **NOTICE**
Do not loosen the knobs completely. Losen them only until the uprights can be moved freely.

3. Fold the uprights upwards (2, 3) until they lock in place.
4. Tighten the left knob (57) by turning it clockwise while holding the left upright (2).
5. Tighten the right knob (57) by turning it counterclockwise while holding the right upright (3).

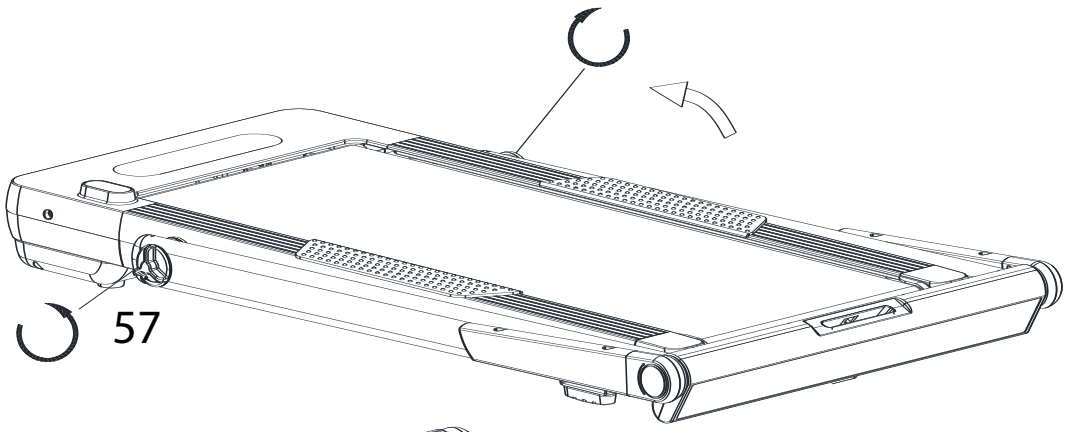

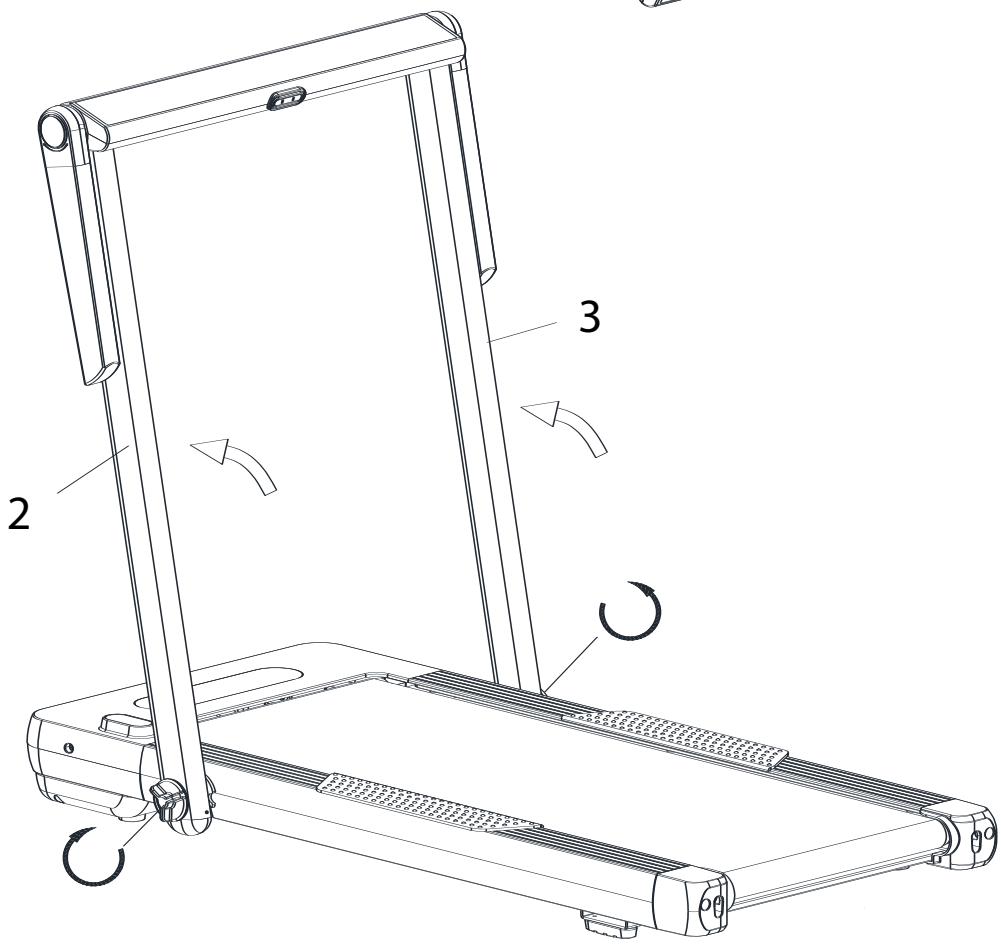

Step 3: Assembly of the Tablet Holder and Safety Key

1. Fold the left armrest (E) and right armrest (F) into a horizontal position and rotate them clockwise until they lock in place.
2. Attach the tablet holder (B) to the console unit.
3. Attach the safety key (68) into the console unit.

→ ***The Alpha Walk 400 is fully assembled and ready for a workout in running mode.***

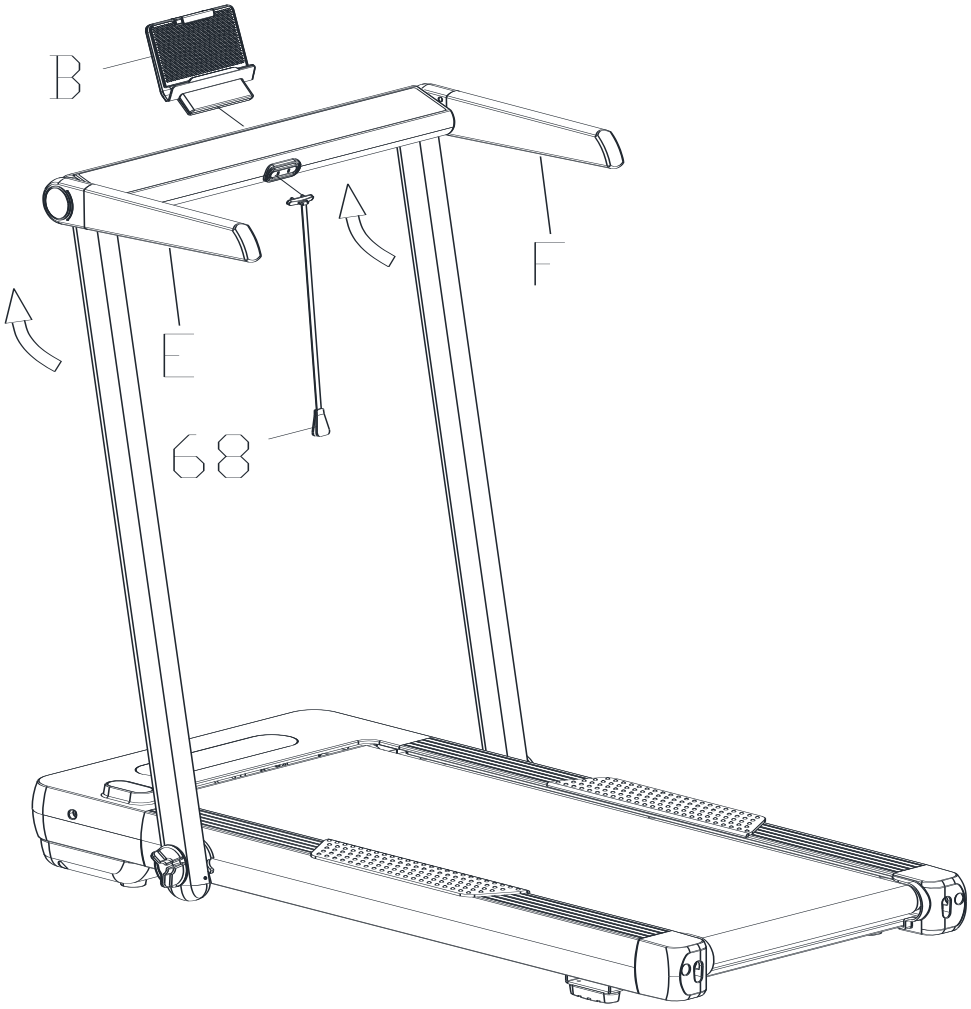

2.3.1 Walking Mode

In this mode, the Alpha Walk 400 can only be operated via the remote control and the uprights must be parallel to the ground.

Step 1: Disassembly of the Tablet Holder and Safety Key

1. Remove the tablet holder (B) and safety key (68) from the console unit.
2. Rotate the left armrest (E) and right armrest (F) counterclockwise until they stop moving.

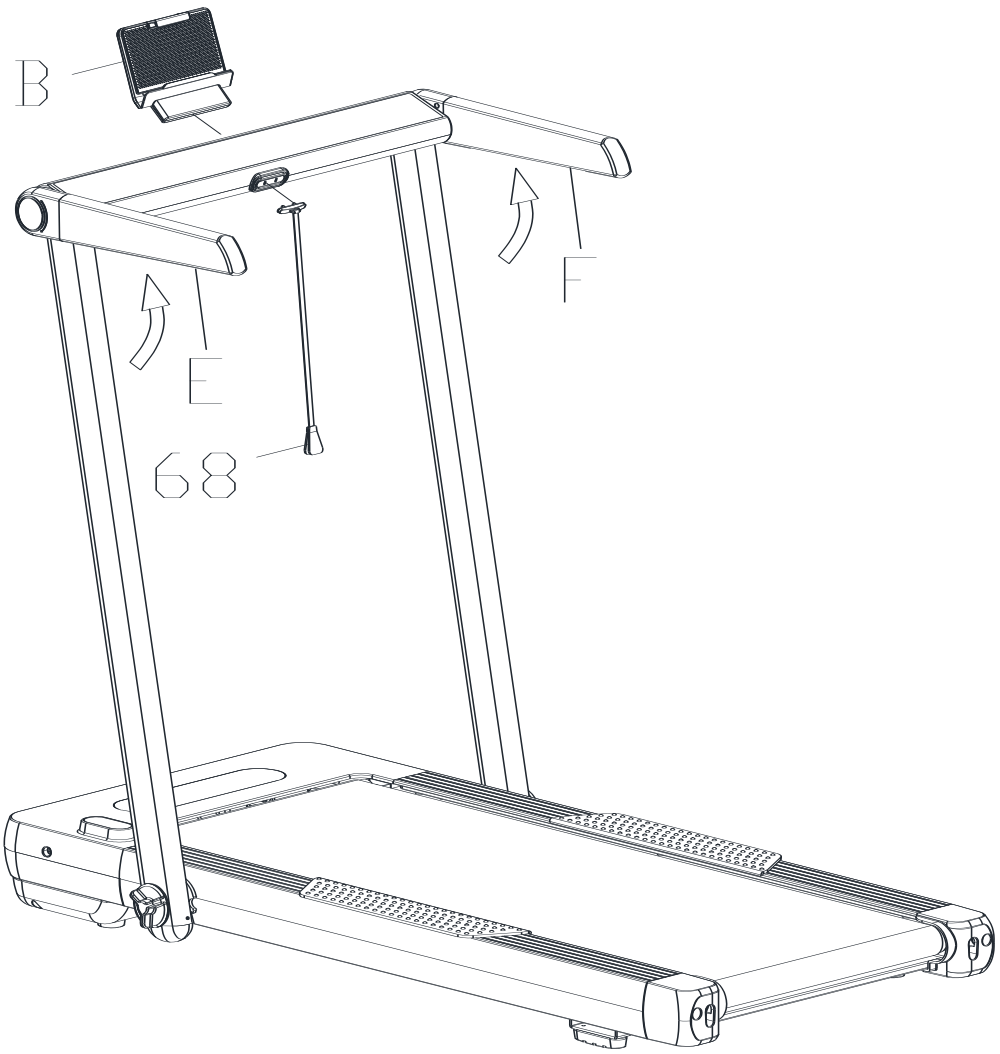

Step 2: Folding the Uprights Downwards

1. Loosen the left knob (57) by turning it counterclockwise.
2. Loosen the right knob (57) by turning it clockwise.

ⓘ **NOTICE**
Do not loosen the knobs completely. Losen them only until the uprights can be moved freely.

3. Fold the uprights downwards (2, 3) until they are parallel to the ground.
4. Tighten the left knob (57) by turning it clockwise (2).
5. Tighten the right knob (57) by turning it counter clockwise (3).

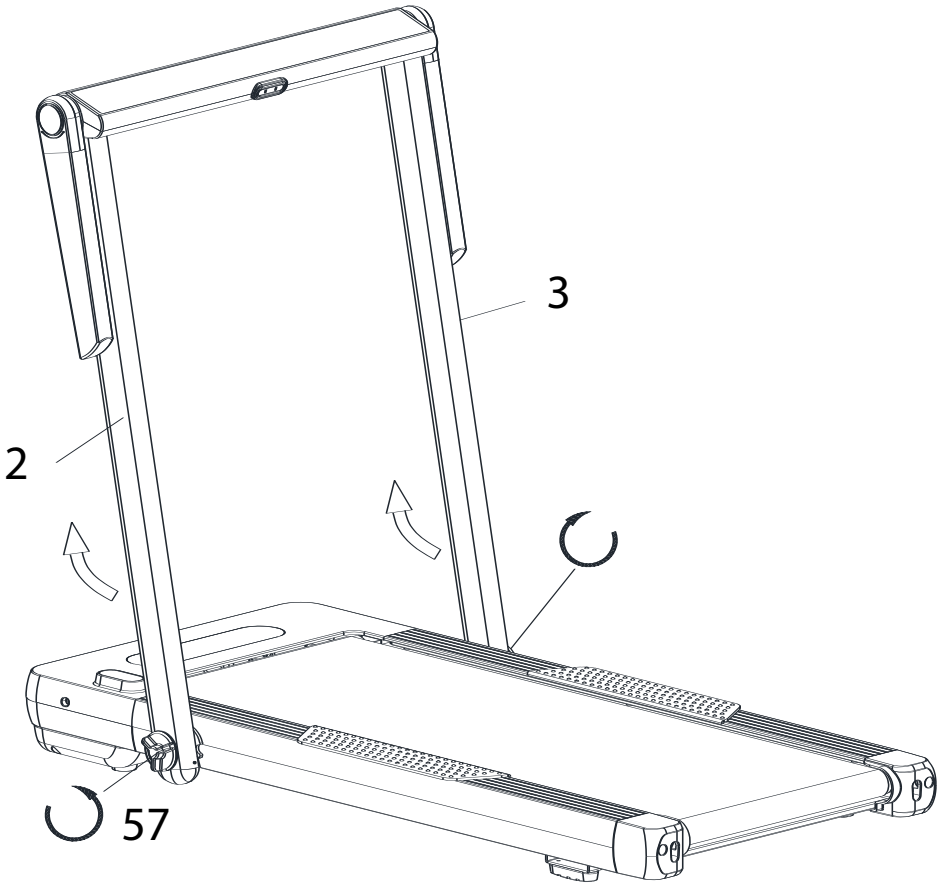

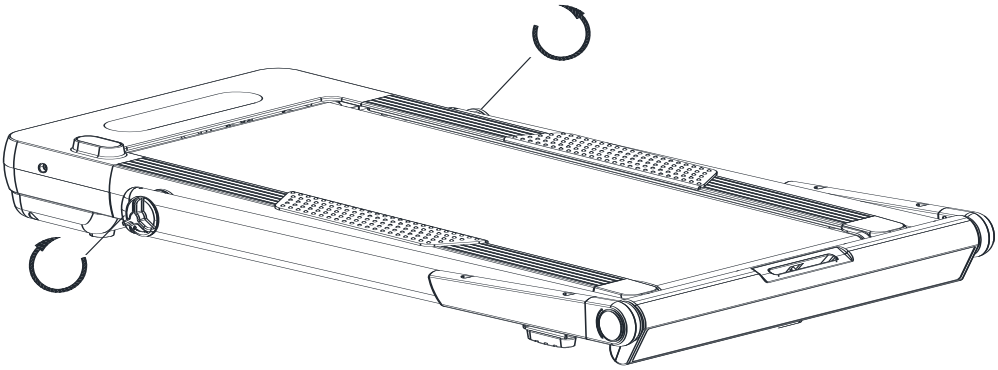

→ ***The treadmill can now be operated via the remote control***

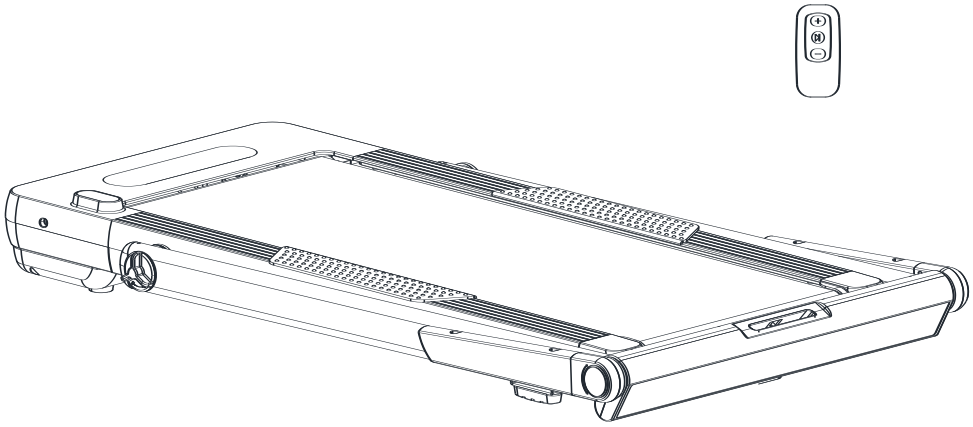

Step 3: Connecting the equipment to the mains supply

► **ATTENTION**
The equipment must not be connected to a multiple socket, otherwise it cannot be guaranteed that the equipment will be supplied with sufficient power. Technical errors can result.

Plug the power plug into a wall outlet that complies with the instructions in the chapter on electrical safety.

2.4 Battery Replacement

The remote control is powered by a CR2032 button cell battery. If the remote control does not work properly, the battery may be low. To replace the battery:

1. Losen the screw of the back cover with a screwdriver.
2. Open the battery compartment by sliding the back cover downwards.
3. Remove the old battery.
4. Insert a new battery.
5. Close the battery compartment by sliding the back cover upwards
6. Tighten the screw with a screwdriver.

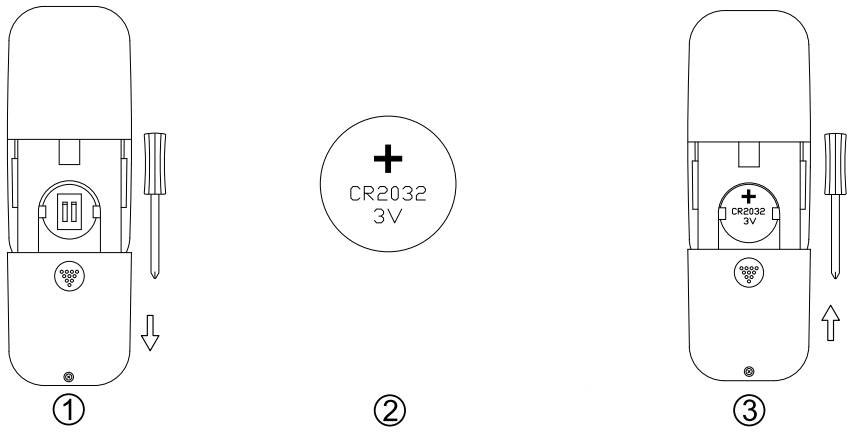

NOTICE

+ Familiarise yourself with all the functions and setting options of the device before starting training. Have the proper use of this product explained to you by a specialist.
+ Always start your training with low intensity and increase evenly and gently. End your training with a cool-down phase. If you are unsure, please consult your physician.
+ Most new treadmills make a knocking noise caused by the running mat sliding over the rollers. The time it takes for the noise to subside depends on the intensity of use, the temperature and the humidity around the treadmill.
+ Please bear in mind that the noise emission under load is higher than without load.

SAFETY KEY

WARNING

+ For your safety, the device is equipped with an EMERGENCY STOP function. The equipment can only be operated if the safety key is correctly attached to the contact point of the cockpit. If the safety key is no longer on the contact point, the equipment automatically stops. Therefore, the Safety Key cord with the clip must be attached to your clothing before every training session. If you want to quickly stop the treadmill, if you can no longer control the speed, or if another emergency occurs, remove the safety key from the cockpit using the cord.
+ To enable the safety key to detach from the contact point of the cockpit in the event of a fall, the safety key clip must be firmly attached to your clothing!
+ Make sure that the safety key is not accessible to children.

3.1 Console Display

Display	Function
SPEED	+ Displays the speed (1-12 km/h)
TIME	+ Displays the time
CAL.	+ Displays the calories
DIS.	+ Displays the distance
STEP	+ Displays the steps

3.2 Button Functions

Button	Function
START	+ Press this button to start/pause the training.
STOP	+ Press this button to stop the training.
SPEED+	+ Increases the speed.
SPEED	+ Decreases the speed.
QUICK KEYS (2,4,6,8,10,12)	+ Increases/decreases the speed to 2, 4, 6, 8, 10 or 12 km/h.
MODE (M)	+ Choose from 3 different modes: time, distance, calories.
PROGRAM (P)	+ Choose from 15 programmes (P1-P15) and 3 user programmes (U1-U3).

► **ATTENTION**
The Alpha Walk 400 must not be used for more than 6 hours a day. After an operating time of one hour, the device must not be used for 30 minutes to avoid overloading.

3.3 Running Mode

In this mode, the remote control is disabled, the safety key is activated and the touch buttons on the console have to be used.

ⓘ **NOTICE**
The uprights need to be folded upwards.

3.3.1 Target Programmes

Users can select from 3 different modes: time, distance, calories.

1. Press **MODE** several times to choose between time, distance or calories.
2. To adjust the value (time, distance or calories), press **+/-**.
3. Press **START** to start the workout.

ⓘ **NOTICE**
The device will start after 3 seconds.

3.3.2 Pre-Set Programmes

There are a total of 15 pre-set programmes available. After starting the treadmill: users can adjust the running speed for each segment individually.

1. To select the pre-set programme, press **PROGRAM** several times until one of the pre-set programmes (P1-P15) is displayed.
2. Press **START** to start the workout.

ⓘ **NOTICE**
The device will start after 3 seconds.

3. To adjust the speed for each segment, press **+/-** or the quick keys.

time / program		Set time/20 time periods=Up and down time period running time																			
		1	2	3	4	5	6	7	8	9	1	11	1	1	1	1	1	1	1	19	20
P01	SPEED	2	3	3	4	5	3	4	5	5	3	4	5	4	4	4	2	3	3	5	3
P02	SPEED	2	4	4	5	6	4	6	6	6	4	5	6	4	4	4	2	2	5	4	2
P03	SPEED	2	4	4	6	6	4	7	7	7	4	7	7	4	4	4	2	4	5	3	2
P04	SPEED	3	5	5	6	7	7	5	7	7	8	8	5	9	5	5	6	6	4	4	3
P05	SPEED	2	4	4	5	6	7	7	5	6	7	8	8	5	4	3	3	6	5	4	2
P06	SPEED	2	4	4	4	5	6	8	8	6	7	8	8	6	4	4	2	5	4	3	2
P07	SPEED	2	3	3	3	4	5	3	4	5	3	4	5	3	3	3	6	6	5	3	3
P08	SPEED	2	3	3	6	7	7	4	6	7	4	6	7	4	4	4	2	3	4	4	2
P09	SPEED	2	4	4	7	7	4	7	8	4	8	9	9	4	4	4	5	6	3	3	2
P10	SPEED	2	4	5	6	7	5	4	6	8	8	6	6	5	4	4	2	4	4	3	3
P11	SPEED	2	5	8	1	7	7	1	1	7	7	10	1	5	5	9	9	5	5	4	3
P12	SPEED	3	4	9	9	5	9	5	8	5	9	7	5	5	7	9	9	5	7	6	3
P13	SPEED	3	6	7	5	9	9	7	5	5	7	9	5	8	5	9	5	9	9	4	3
P14	SPEED	2	2	4	5	6	5	4	3	2	1	2	3	4	5	6	5	4	3	2	1
P15	SPEED	2	4	6	8	6	6	4	4	2	2	2	4	6	8	6	6	4	4	2	2

3.3.3 User Programmes

There are 3 user programmes (U1-U3) available. Users can set the time and running speed individually.

1. To select one of the user programmes, press **PROGRAM** several times until U1, U2 or U3 is displayed.
2. To adjust the time, press **+/-**.
3. Press **MODE** to confirm.
4. To adjust the speed, press **+/-** or the quick keys.
5. Press **START** to start the workout.

ⓘ **NOTICE**
The device will start after 3 seconds.

3.4 Function: Remote

3.4.1 Walking Mode

In this mode, the Alpha Walk 400 can be operated via the remote control (touch buttons are deactivated) and the safety key is deactivated.

Display	Function
SPEED	+ Displays the speed (1-6 km/h)
TIME	+ Displays the time
CAL.	+ Displays the calories
DIS.	+ Displays the distance
STEP	+ Displays the steps

ⓘ **NOTICE**
When the treadmill is in walking mode, the max. speed is automatically limited to 6 km/h.

3.4.2 Remote Control

Button	Function
START/STOP	+ Press this button to start/pause/stop the training.
SPEED+	+ Increases the speed.
SPEED-	+ Decreases the speed.

3.4.3 Remote Control Pairing

1. Make sure that the treadmill is switched off and lower the treadmill's uprights.
2. Press and hold START on the remote control and switch on the treadmill at the same time.
3. Continue holding START until the buzzer makes a "beep" sound.

→ ***The remote control is successfully paired.***

ⓘ **NOTICE**
Hold the remote control close to the treadmill, otherwise it may not function properly.

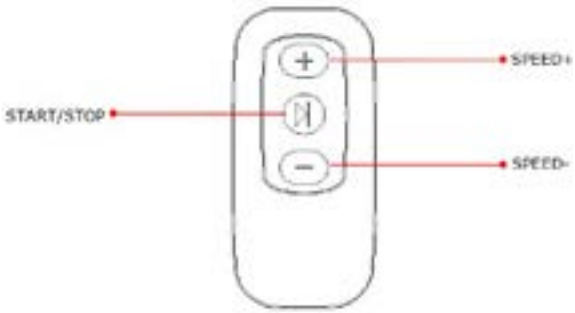

4.1 General Instructions

When training, it is important to perform the exercises correctly in order to avoid injuries and achieve the desired training effect. Make sure you use the correct technique and train at an appropriate intensity level. Always consult an expert such as a trainer or doctor if you are unsure or have health problems. Always start your training with a low load and increase it evenly and gently.
End your training with a cool-down phase. If you have any questions or uncertainties, contact your doctor.

4.1.1 Training clothes

During training, wear appropriate sports clothing that is comfortable and breathable. Avoid clothing that restricts you or is uncomfortable. Make sure that your shoes are suitable and offer you sufficient support. In addition, always carry a towel with you to wipe away sweat and keep the equipment clean.

4.1.2 Warming up and stretching

It is important to warm up and stretch properly before training to avoid injury and improve performance. Stretching helps to loosen muscles and improve flexibility. Be sure to incorporate a short stretching routine before each workout.

Warm-up exercise:

1. Stand upright with your feet about shoulder-width apart.
2. Start with gentle arm circles by slowly moving your arms forwards in small circles in a controlled manner.
3. Perform arm circles backwards to loosen your shoulders and arms.
4. Do squats by slowly squatting down and then straightening up again. Make sure that your knees do not extend beyond your toes.

⚠ **CAUTION**
Do not exercise with sore muscles or take it easy on the affected muscles, as this can lead to injuries.

4.1.3 Medication

If you regularly take medication and want to exercise, it is important to be aware of possible side effects. Ask your doctor whether your medication affects your workout.

4.1.4 Used muscle groups

Rowing uses the following muscle groups:

+ Gluteal muscle
+ Leg muscles

Make sure you keep your back straight during training. Do not hunch over and do not arch your back.

4.1.5 Exercise frequency

Regular exercise is crucial to making progress and staying healthy in the long term. Continuous exercise can strengthen muscles, improve endurance and enhance overall well-being. Remember that even small workouts can be done regularly to achieve long-term results.

Training with heart rate orientation
Heart rate orientation guarantees an extremely effective and healthy training. Through your age and the following table, you can quickly and easily read and determine the optimal pulse for your training. An acoustic alarm will sound if your heart rate exceeds the set target heart rate. Which target heart rate is important for which training goal can be found out in the following.

Fat burning (weight management): The main goal here is to burn deposits of fat. In order to achieve this training goal, a low training intensity (approximately 55% of the maximum heart rate) and a longer training period are required.

Cardiovascular training (cardio training): The primary goal is to increase stamina and fitness through an improved provision of oxygen through the cardiovascular system. In order to achieve this training goal, medium intensity (approximately 75% of the maximum heart rate) with a medium training period is required.

Anaerobic (maximum) load training: The main goal of maximum load training is to improve recovery after short, intense loads in order to be able to quickly return to the aerobic zone. In order to achieve this training goal, a high intensity (approximately 90% of the maximum heart rate) with short, intense load is required, which is followed by a recovery phase in order to prevent muscle fatigue.

Example:
For a 45-year-old man, the maximum heart rate is 175 (220 - 45 = 175).

+ The fat burning target zone (55%) is at approximately 96 beats/min. = (220 - age) x 0.55.
+ The cardio target zone (75%) is at approximately 131 beats/min. = (220 - age) x 0.75.
+ The maximum heart rate for an anaerobic load training (90%) is at approximately 157 beats/min. = (220 - age) x 0.9.

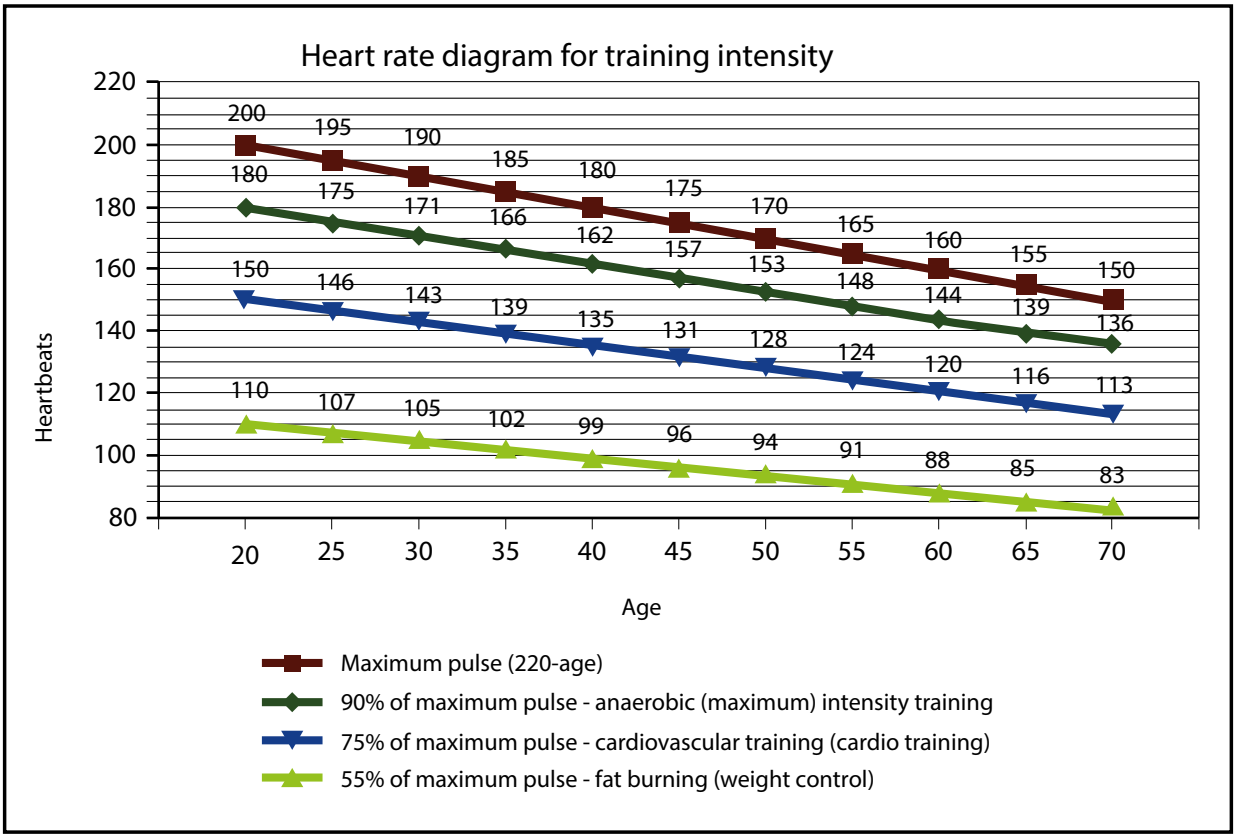

4.2 Workout journal

(Copy template)

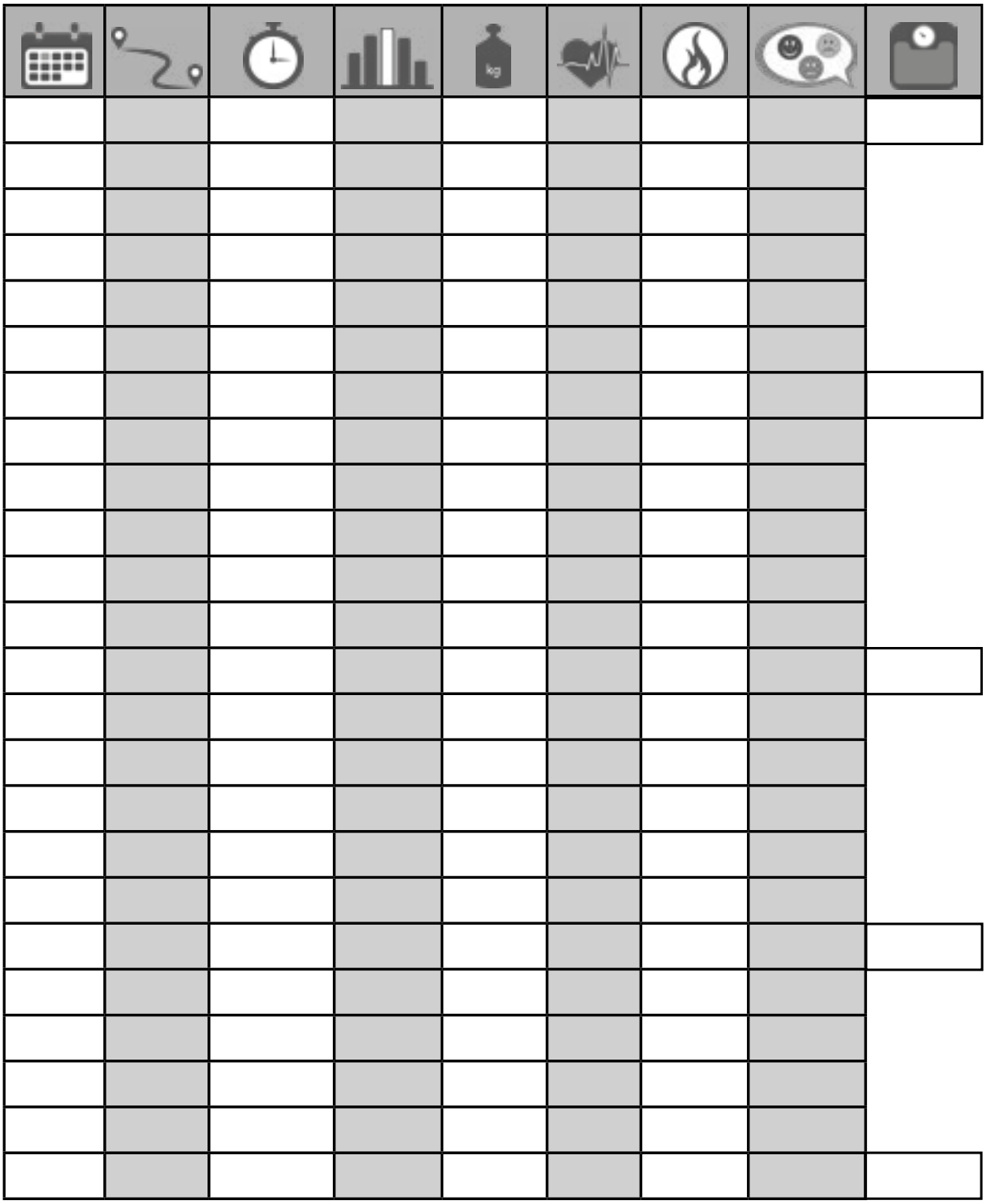

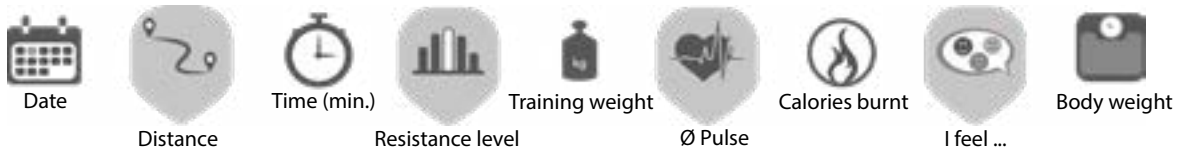

5.1 General Instructions

⚠ **WARNING**

+ The storage location should be chosen so that improper use by third parties or children can be prevented.
+ If your equipment does not have transportation wheels, the equipment must be disassembled before transportation.

► **ATTENTION**

+ Make sure that the equipment is protected from moisture, dust and dirt in the selected storage location. The storage location should be dry and well ventilated and have a constant ambient temperature between 10°C and 35°C.

5.2 Transportation Wheels

► **ATTENTION**

If you want to transport your equipment over particularly sensitive and soft floor coverings, such as parquet, planks or laminate, lay out the transport route with cardboard or similar to avoid possible floor damage.

1. Stand behind the equipment and lift it until the weight is transferred to the transportation wheels. After that, you easily can move the equipment to a new position. For long transport distances the equipment should be disassembled and safely packed.
2. Select the new location by following the instructions in the section 1.4 of this manual.

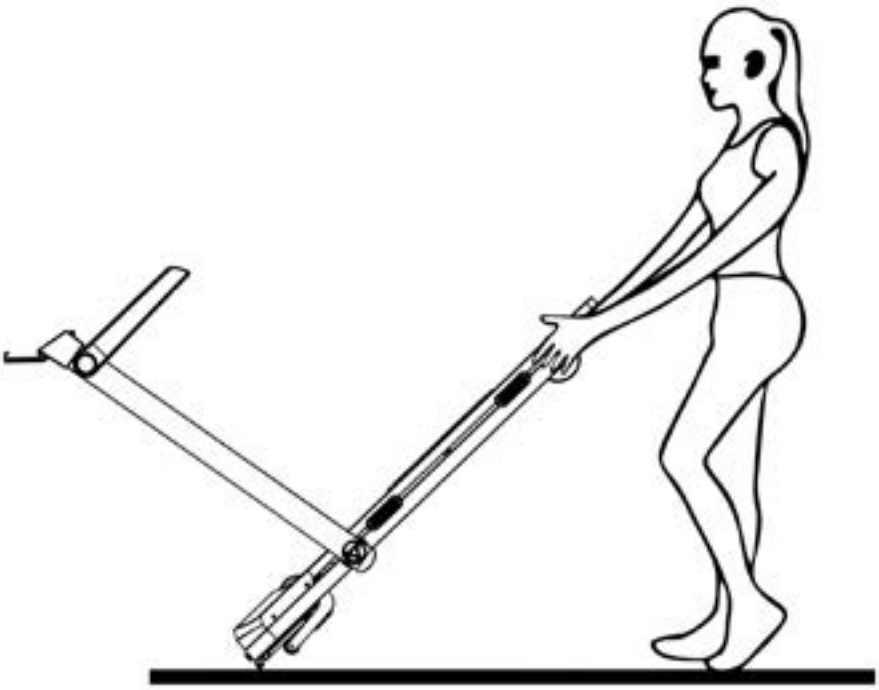

6.1 General Instructions

⚠ **WARNING**

+ Do not make any improper changes to the equipment.

⚠ **CAUTION**

+ Damaged or worn components may affect your safety and the life of the equipment. Therefore, immediately replace damaged or worn components. In such a case, contact the contract partner. The equipment must not be used until it has been repaired. If necessary, use only original spare parts.

► **ATTENTION**

+ In addition to the instructions and recommendations for maintenance and care given here, additional service and/or repair work may be necessary; this must only be carried out by authorised service technicians.

6.2 Faults and Fault Diagnosis

The equipment undergoes regular quality controls during production. Nevertheless, faults or malfunctions may occur. Frequently, individual parts are responsible for these disturbances, an exchange is usually sufficient. Please refer to the following overview for the most common errors and how to correct them. If the equipment still does not function properly, contact your contract partner.

Fault	Cause	Solution
Console is not responding	Safety key missing or not inserted correctly	Check whether Safety Key is inserted and insert if necessary
Running mat slanting	Running mat not centered	Adjust the running mat according to the instructions
Grinding noises		
Running mat slips through/stops	Tape tension/lubrication not correct	Check belt tension/lubrication according to instructions
Display is blank/is not working	+ Interrupted power connection + Loose cabel connections	+ Power switch to on + Check whether Safety Key is plugged in + Check cable connections
No pulse display	+ Sources of interference in the room + unsuitable chest strap + Wrong position of chest strap + Chest strap defective or battery empty + Pulse display defective	+ Eliminate sources of interference (e.g. mobile phone, WLAN, lawn mower and vacuum cleaner robot, etc. ...) + Use a suitable chest strap (see RECOMMENDED ACCESSORIES). + Reposition chest strap and/or moisten electrodes + Changing batteries + Check if pulse display by hand pulse possible

6.3 Error Codes and Troubleshooting

The electronics of the equipment continuously carries out tests. In case of deviations, an error code appears on the display and normal operation is stopped for your safety.

ⓘ **NOTICE**
Before contacting the technical support, please try the following solutions listed below. In case a different error code is displayed or the listed solutions do not work, please contact the technical support.

Error code	Cause	Solution
ER1	No signal from motor driver received by display panel	Reconnect the control wires.
ER4	Over current protection	Check belt tension/lubrication.
ER5	Overload protection	Check belt tension/lubrication.
ER7	Controller not receiving display panel signal	Reconnect the control wires.

Please contact the contract partner for technical support.

6.4 Care and Maintenance

The most important maintenance measure is the care of the running mat. This includes adjustment, re tensioning and lubrication of the running mat. Damage resulting from insufficient or neglected care is not covered by the warranty. You should therefore carry out maintenance checks at regular intervals. Be very careful when adjusting and tightening the running mat, as a strong over voltage or under voltage can cause damage to the equipment. The running mat is adjusted at the factory according to the regulations before delivery. However, it may happen that the running mat slips during transport.

By scanning the QR-code with the camera function or QR-code scanner app of your smartphone/tablet, a video on general maintenance of a treadmill opens on YouTube. The video serves to illustrate the maintenance points described in this manual.

Please note that the video may not be available in your language or with appropriate subtitles.

If you cannot scan QR-codes, you can access all Fitshop videos on YouTube by first opening YouTube and entering "Fitshop" in the search field.

6.4.1 Adjusting the Running Mat

During training, the running mat should run as centrally and straight as possible. The alignment of the running mat can change depending on the stress and load. Another reason can be the positioning of the equipment on an uneven surface.

⚠ **CAUTION**
During the following maintenance nobody must be on the treadmill!

1. Let the treadmill run at a speed of 5 km/h.
2. If the running mat deviates to the left, turn the left adjusting screw at the rear end of the device max. one ¼ turn clockwise and the right adjusting screw max. one ¼ turn anticlockwise.
3. If the running mat deviates to the right, turn the right adjusting screw at the rear end of the device max. ¼ turn clockwise and the left adjusting screw max. ¼ turn anticlockwise.
4. Then observe the mat for about 30 seconds, as the change is not immediately visible.
5. Repeat this procedure until the running mat is straight again. If the running mat cannot be adjusted, please contact your contract partner.

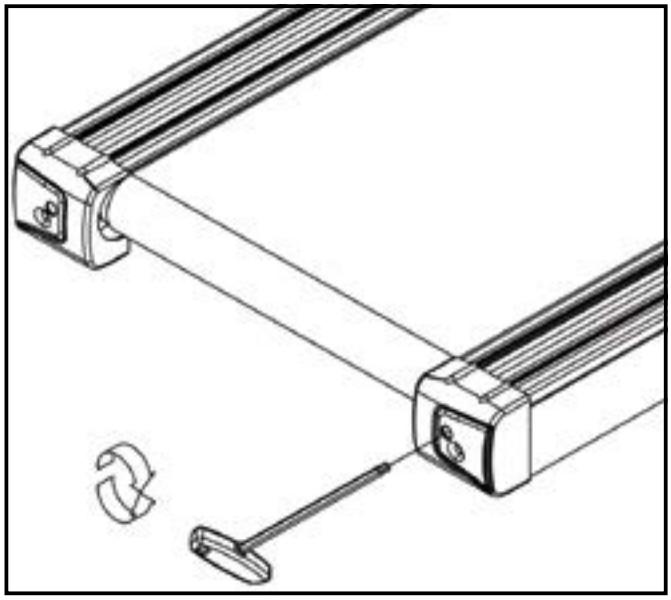

6.4.2 Re-tensioning the Running Mat

If the running mat slips over the rollers during operation (if this is the case, there is a noticeable jerk during running), the running mat must be re tightened.

In most cases, the slipping is caused by stretching of the mat through use. This is perfectly normal.

ⓘ **NOTICE**
Re-tensioning is carried out using the same adjusting screws that are used for adjustment.

1. Let the treadmill run at a speed of 5km/h.
2. Turn the left and right adjusting screws directly one after the other, max. one ¼ turn clockwise.
3. Then check whether the running mat continues to slip. If this is the case, you must perform the described procedure again.

6.4.3 Lubricating the Running Mat

If the running mat is not sufficiently lubricated, friction increases significantly and this leads to heavy wear of the endless belt, running plate, motor and circuit board. If you feel an increased friction of the running mat, this is an indication that you should lubricate the mat. However, lubrication should be carried out at least every 3 months or every 50 operating hours. Whichever case comes first.

ⓘ **NOTICE**
If your treadmill is equipped with a folding mechanism, you can also lubricate it when it is folded.

1. Raise the running mat slightly.
2. Apply some silicone oil or silicone spray to the entire deck and distribute evenly.
3. Continue turning the belt by hand so that the entire surface between the endless belt and the running plate is lubricated.
4. Wipe off the excess silicone oil or silicone spray.

ⓘ **NOTICE**
This maintenance must also be carried out after prolonged non-use of the equipment.

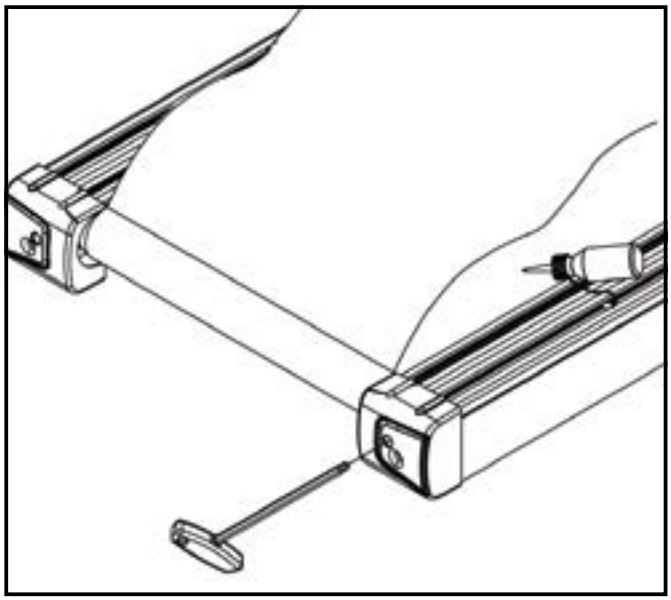

6.5 Maintenance and Inspection Calendar

To avoid damage from body sweat, the equipment must be cleaned with a damp towel (no solvents!) after each training session.

The following routine tasks must be performed at the specified intervals:

Part	Weekly	Monthly	Quarterly
Display console	C	I	
Tension of the running mat			I
Lubrication of the running mat			I
Plastic covers	C	I	
Screws and cable connections			I
Legend: C = clean; I = inspect			

By scanning the QR-code with the camera function or QR-code scanner app of your smartphone/tablet, a video on general maintenance of a treadmill opens on YouTube. The video serves to illustrate the maintenance points described in this manual.

Please note that the video may not be available in your language or with appropriate subtitles.

If you cannot scan QR-codes, you can access all Fitshop videos on YouTube by first opening YouTube and entering "Fitshop" in the search field.

7 DISPOSAL

At the end of its operational life, this equipment cannot be disposed of in normal household waste. Instead, it must be disposed of via an electricals recycling centre. Further information can be obtained from your local authority's recycling service.

The materials can be recycled as per their symbols. Through the reuse, recycling of materials or other forms of recovery of old equipment, you make an important contribution to the protection of the environment.

8 RECOMMENDED ACCESSORIES

To make your training experience even more efficient and pleasant, we recommend that you add suiting accessories to your fitness equipment. For elliptical cross trainers this could for example be a **floor mat**, which makes your fitness equipment stand more securely and also protects the floor from sweat or **silicone spray** to keep moving parts in good shape.

If you have purchased a fitness machine with pulse training and want to train your heart rate, we strongly recommend that you use a compatible **chest strap**, as this ensures optimum transmission of the heart rate.

Our range of accessories offers the highest quality and makes training even better. If you would like to find out more about compatible accessories, please go to the detail page of the product in our webshop (the easiest way is to enter the article number in the search field above) and go to the recommended accessories on this page. Of course, you can also contact our customer service: by telephone, e-mail, in one of our branches or via our social media channels. We will be happy to advise you!

chest strap

chest strap contact gel

silicone spray

floor mat

9.1 Serial Number and Model Name

In order to provide you with the best possible service, please have the model name, article number, serial number, exploded drawing and parts list ready. The corresponding contact options can be found in chapter 11 of this operating manual.

ⓘ **NOTICE**
The serial number of your equipment is unique. It's located on a white sticker. The exact position of this sticker is shown in the following illustration.

Enter the serial number in the appropriate field.

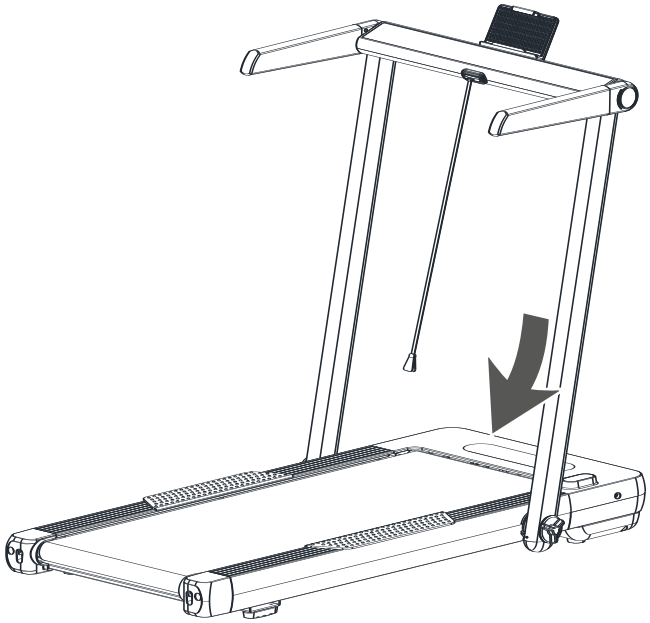

Serial number:

Brand / Category:

Kettler / treadmill

Model Name:

Kettler Treadmill Alpha Walk 400

Article Number:

K-TM2021-100

9.2 Parts List

No.	Name	Specification	Qty.
1	Main frame		1
2	Left Upright		1
3	Right Upright		1
4	Left Handrail Tube		1
5	Right Handrail Tube		1
6	Console Rack		1
7	Front Roller		1
8	Rear Roller		1
9	Spring		2
10	Small spring		1
11	Hex socket cap screw	M8*25	2
12	Hex socket cap screw	M6*20	4
13	Hex socket cap screw	M8*20	2
14	Hex socket cap screw	M8*50	3
15	Hex socket cap screw	M8*15	2
16	Hex socket cap screw	M6*25	2
17	Hex Socket Head Bolt	M6*25	6
18	Cross Recessed Self-Tapping Screw	ST3*12	2
19	Cross recessed washer head self-drilling screw	ST4*15	19
20	Cross recessed washer head self-drilling screw	ST4*19	2
21	Cross recessed pan head self-tapping screw	ST4*15	8
22	Cross recessed pan head self-tapping screw	ST4*12	12
23	Cross Recessed Flat Head Bolt	M5*10	5
24	Cross Recessed Flat Head Bolt	M4*15	4
25	Cross Recessed Flat Head Self-Tapping Screw	ST2.9*15	4
26	Cross Recessed Self-Tapping Screw	ST2.9*10	10
27	Cross Recessed Self-Tapping Screw	ST2.9*5	25
28	Cross Recessed Self-Tapping Screw	ST2.5*5	6
29	Hexagonal lock nut	M8	4
30	Flat washer	Ø20*Ø8.2*1	4
31	Standard spring spacers	Ø8	4

32	Flat washer	Ø13*Ø6.5*1.5	8
33	Nylon washer	Ø18*Ø10.2*4	2
34	Motor upper cover		1
35	Motor lower cover		1
36	Left rear end cap		1
37	Right rear end cap		1
38	Tablet clip		1
39	Tablet top cover		1
40	Tablet bottom cover		1
41	Tablet mount locking latch		1
42	Handrail outer cover		2
43	Front foot pad		2
44	Handrail Foam		2
45	Running belt		1
46	Running board		1
47	Left side rail		1
48	Right side rail		1
49	Tablet silicone pad		1
50	Upright inner tube plug		2
51	Console upper cover		1
52	Console lower over		1
53	Handrail inner cover		2
54	Transport wheel		2
55	Foot pad		2
56	Rear foot pad		2
57	Knob		2
58	Limit tube		2
59	Tension rope		2
60	Motor Belt		1
61	Rubber pad		6
62	Console		1
63	Controller		1
64	Upper Signal Wire		1
65	Middle Signal Wire		1

66	Lower Signal Wire		1
67	Safety key socket		1
68	Safety key		1
69	Motor		1
70	Power switch		1
71	Power cord		1
72	Power socket		1
73	Blue single branch	250mm	2
74	Blue single branch	100mm	1
75	Brown single branch	250mm	2
76	Brown single branch	100mm	1
77	Grounding wire	250mm	2
78	Silicone oil		1
79	Magnetic ring		1
80	Hexagon Wrench		1
81	Side strip pedal		2
84	Remote control		1
85	Lower display		1
86	Lower control connecting cable		1
87	LED display module		3
88	Inductor		1
89	Filter		1

9.3 Exploded Drawing

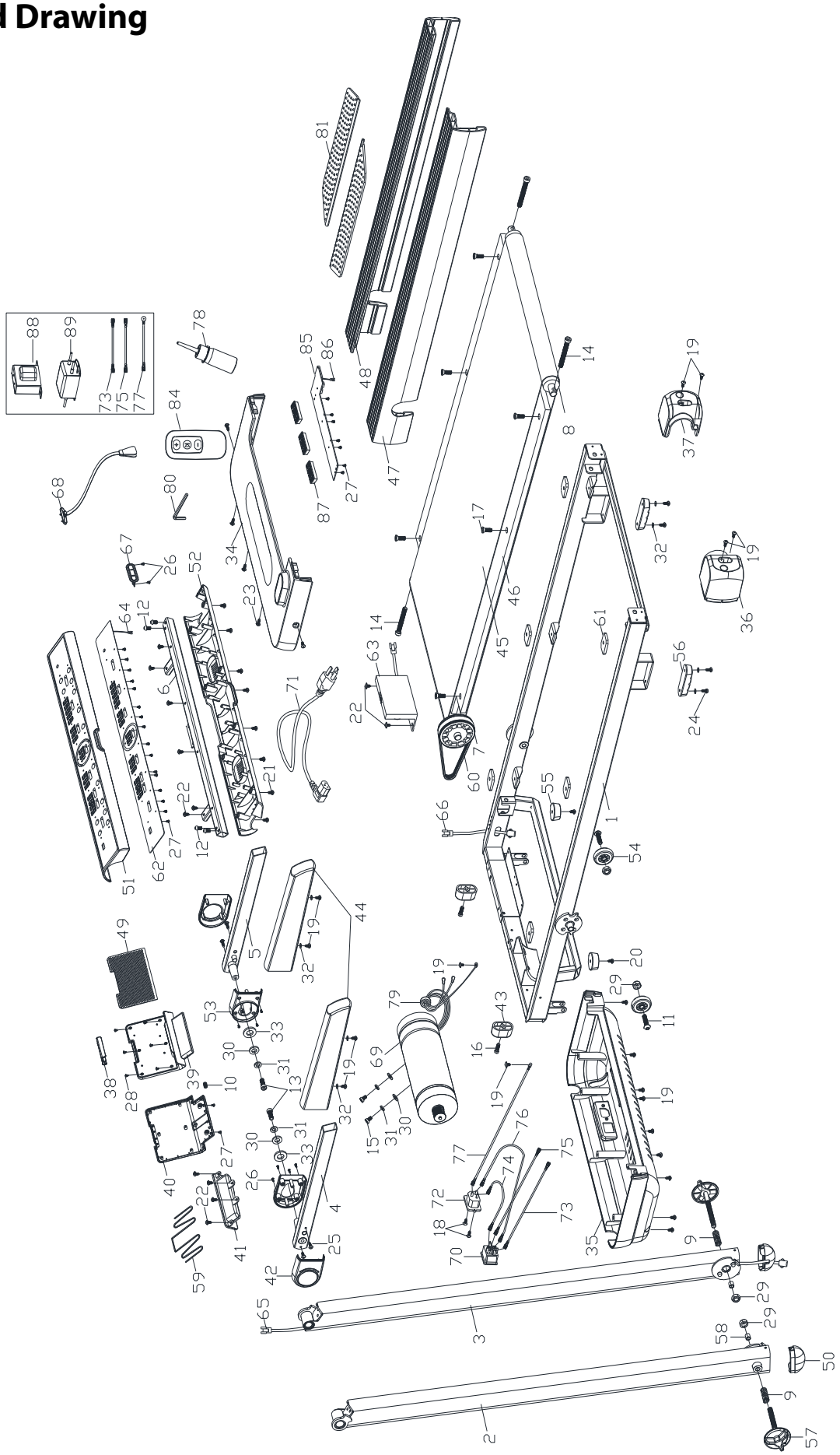

10 WARRANTY

Products from Kettler® are subject to strict quality control. However, if a fitness equipment purchased from us does not work perfectly, we take it very seriously and ask you to contact our customer service as indicated. We are happy to help you by phone via our service hotline.

Error Descriptions
Your fitness equipment is developed for long-term, high-quality training. However, should a problem arise, please first read the operating instructions. For further assistance, please contact your contract partner or call our service hotline. To ensure your problem is solved as quickly as possible, please describe the defect as exactly as possible.

In addition to the statutory warranty, we provide a warranty for every fitness equipment purchased from us according to the following provisions.

Your statutory rights are not affected.

Warrantee
The warrantee is the first/original buyer and/or any person who received a newly purchased product as a gift from the original buyer.

Warranty period
The warranty periods, shown on our web shop, begin on delivery of the fitness equipment. The respective warranty periods for your equipment can be found on its product website.

Repair Costs
According to our choice, there will either be a repair, a replacement of individual damaged parts or a complete replacement. Spare parts, that have to be mounted while assembling the equipment, have to be replaced by the warrantee personally and are not a part of repair. After the expiration of the warranty period, the responsibility for parts costs, repair costs, installation costs and delivery costs lies with the warranty holder.

The terms of use are defined as follows:

- Home use: solely for private use in private households up to 3 hours per day
- Semi-professional use: up to 6 hours per day (e. g. rehabilitation centres, hotels, clubs, company gyms)
- Professional use: more than 6 hours per day (e. g. commercial gyms)

Warranty Service
Within the warranty period, equipment which develops faults as a result of material or manufacturing defects, will be repaired or replaced at our discretion. Ownership of equipment or parts of equipment which have been replaced is transferred to us. The warranty period is not extended nor does a new warranty period begin following repair or replacement under the warranty.

Warranty Conditions
For the warranty to be valid, the following steps must be taken:

Please contact our customer service by email or phone. If the product under warranty has to be sent in for repair, the seller bears costs. After expiry of the warranty, the buyer bears the costs of transport and insurance. If the fault is covered by our warranty, you will receive a new or repaired equipment in return.

Warranty claims are invalid in case of damage resulting from:

+ misuse or improper handling
+ environmental influences (moisture, heat, electrical surge, dust, etc.)
+ failure to follow the current safety measures for the equipment
+ failure to follow the operating instructions
+ use of force (e. g. hitting, kicking, falling)
+ interventions which were not carried out by one of our authorized service centres
+ unauthorised repair attempts

Proof of Purchase and Serial Number
Please make sure that you are able to provide the appropriate receipt when claiming on your warranty. So that we can clearly identify the model of your equipment, and for the purposes of our quality control, you will need to give the serial number of your equipment, when contacting the service team. Where possible please have your serial number and your customer number ready when you call our service hotline. It will help us to deal with your request swiftly.

If you cannot find the serial number on your fitness equipment, our service team is at your disposal to offer further information.

Service outside of the Warranty Period
We are also happy to issue an individual cost estimate if there is a problem with your fitness equipment after the warranty has expired, or in cases which do not fall under the terms of the warranty, e. g. normal wear and tear. Please contact our customer service team to find a quick and cost-effective solution to your problem. In such a case you will be responsible for the delivery costs.

Communication
Many problems can be solved just by speaking to us as your specialist supplier. We know how important it is to you as a user of the fitness equipment to have problems solved quickly and simply, so you can enjoy working out with minimal interruption. For that reason, we also want to resolve your queries quickly and in a straightforward manner. Thus, please always keep your customer number and the serial number of the faulty equipment handy.

11 CONTACT

DE

TECHNIK

+49 4621 4210-900
+49 4621 4210-698
technik@fitshop.de
Öffnungszeiten entnehmen Sie unserer Homepage.

SERVICE

0800 20 20277 (kostenlos)
04621 4210 - 0
info@fitshop.de
Öffnungszeiten entnehmen Sie unserer Homepage: https://stg.fit/statita

DK

TEKNIK OG SERVICE

80 90 16 50
+49 4621 4210-945
info@fitshop.dk
Åbningstider kan findes på hjemmesiden: https://stg.fit/statit7

EN

CUSTOMER SUPPORT

00800 2020 2772
+494621 4210 944
service@fitshop.com
You can find the opening hours on our homepage: https://fsg.fit/en

FR

TECHNIQUE & SERVICE

+33 (0) 189 530984
+49 4621 42 10 933
info@fitshop.fr
Vous trouverez les heures d'ouverture sur notre site Internet: https://stg.fit/statit4

BE

TECHNIQUE & SERVICE

02 732 46 77
+49 4621 4210 933
info@fitshop.be
Vous trouverez les heures d'ouverture sur notre site Internet: https://stg.fit/statit8

ES

TECNOLOGÍA Y SERVICIOS

911 238 029
info@fitshop.es
Consulta nuestro horario de apertura en la página web: https://stg.fit/statit5

NL

TECHNISCHE DIENST & SERVICE

+31 172 619961
service@fitshop.nl
De openingstijden vindt u op onze homepage: https://stg.fit/statit3

INT

TECHNICAL SUPPORT & SERVICE

+49 4621 4210-944
service-int@fitshop.de
You can find the opening hours on our homepage: https://stg.fit/statita

PL

DZIAŁ TECHNICZNY I SERWIS

22 307 43 21
+49 4621 42 10-948
info@fitshop.pl
Godziny otwarcia można znaleźć na stronie głównej: https://stg.fit/statit6

AT

TECHNIK & SERVICE

0800 20 20277 (Freecall)
+49 4621 42 10-0
info@fitshop.at
Öffnungszeiten entnehmen Sie unserer Homepage: https://stg.fit/statitb

CH

TECHNIK & SERVICE

0800 202 027
+49 4621 42 10-0
info@fitshop.ch
Öffnungszeiten entnehmen Sie unserer Homepage: https://stg.fit/statit9

Please find a detailed overview including address and opening hours for all stores of the Fitshop Group in Germany and abroad on the following website:

www.fitshop.com/en/stores

KETTLER

WEBSHOP AND SOCIAL MEDIA

Since 2024 Kettler sports equipment is part of the Fitshop brand family, Europe's largest specialist retailer for home fitness equipment. Kettler equipment such as treadmills, cross trainers, and rowing machines have always played an important role in Fitshop's more than 40-year history. Kettler stands for the highest product quality, reliability, and tradition. Kettler sports equipment helps you lead an active and healthy life. They make exercise fun for young and old. As part of the Fitshop Group, Kettler Sport remains true to these values.

Visit us also on our social media platforms or our online shop!

FIT SHOP	www.fitshop.com/kettler www.kettlersport.com
	www.facebook.com/fitshopgroup/
	www.instagram.com/fitshopgroup/
	www.linkedin.com/company/fitshop-gmbh
	www.stg.fit/YouTube_DE

Kettler is part of the Fitshop Group.

Notes

Notes

KETTLER

ALPHA WALK 400